Media Application Server™

RELEASE 3.6.2

Installation and Configuration Guide

Manual Part No. 28-0269

July 2013

Copyright © 2000—2013 Harmonic Inc. All rights reserved. Omneon, and the Omneon logo are trademarks of Harmonic Inc.

Disclaimer

Harmonic reserves the right to alter the equipment specifications and descriptions in this publication without prior notice. No part of this publication shall be deemed to be part of any contract or warranty unless specifically incorporated by reference into such contract or warranty. The information contained herein is merely descriptive in nature, and does not constitute a binding offer for sale of the product described herein. Harmonic assumes no responsibility or liability arising from the use of the products described herein, except as expressly agreed to in writing by Harmonic. The use and purchase of this product do not convey a license under any patent rights, copyrights, trademark rights, or any intellectual property rights of Harmonic. Nothing hereunder constitutes a representation or warranty that using any products in the manner described herein will not infringe any patents of third parties.

Trademark Acknowledgments

Harmonic and all Harmonic product names are trademarks of Harmonic Inc. All other trademarks are the property of their respective owners.

The software described in this document is furnished under a license agreement or nondisclosure agreement. The software may be used or copied only in accordance with the terms of those agreements.

May be covered by one or more of U.S. Patents No. 6,571,351; 6,696,996; 6,545,721; 6,574,225; 6,895,003; 6,522,649; 6,643,702; foreign counterparts and pending patent applications.

This system is distributed with certain other software that may require disclosure or distribution of licenses, copyright notices, conditions of use, disclaimers and/or other matter. Use of this system or otherwise fulfilling their conditions constitutes your acceptance of them, as necessary. Copies of such licenses, notices, conditions, disclaimers and/or other matter are available in any one of the following locations: the LEGAL NOTICES AND LICENSES directory of the distribution disk of the software, the root directory of the hard disk drive of the Products, or by contacting us at support@harmonicinc.com.

Notice

Information contained in this guide is subject to change without notice or obligation. While every effort has been made to ensure that the information is accurate as of the publication date, Harmonic Inc. assumes no liability for errors or omissions. In addition, Harmonic Inc. assumes no responsibility for damages resulting from the use of this guide.

License Agreement and Limited Warranty

1. AGREEMENT: This is a legal agreement ("Agreement") between you ("you" or "your") and Harmonic, or its appropriate local affiliate ("Harmonic", "we", "us" or "our"). Use of our product(s) and any updates thereto purchased or validly obtained by you (the "Products"), and/or the Software (as defined below) (collectively, the "System"), constitutes your acceptance of this Agreement. "Use" includes opening or breaking the seal on the packet containing this Agreement, installing or downloading the Software as defined below or using the Software preloaded or embedded in your System. As used herein, the term "Software" means the Harmonic owned software and/or firmware used in or with the Products and embedded into, provided with or loaded onto the Products in object code format, but does not include, and this Agreement does not address, any third-party or free or open source software separately licensed to you ("Third Party Software"). If you do not agree to this Agreement, you shall promptly return the System with a dated receipt to the seller for a full refund.

2. LICENSE: Subject to the terms and conditions of this Agreement (including payment), we hereby grant you a nonexclusive, nontransferable license to use the object code version of the Software embedded into, provided solely for use with or loaded onto the Product, and the accompanying documentation ("Documentation") for your internal business purposes. The Software and any authorized copies are owned by us or our suppliers, and are protected by law, including without limitation the copyright laws and treaties of the U.S.A. and other countries. Evaluation versions of the Software may be subject to a time-limited license key.

3. RESTRICTIONS: You (and your employees and contractors) shall not attempt to reverse engineer, disassemble, modify, translate, create derivative works of, rent, lease (including use on a timesharing, applications service provider, service bureau or similar basis), loan, distribute, sublicense or otherwise transfer the System, in whole or part except to the extent otherwise permitted by law. The Software may be operated on a network only if and as permitted by its Documentation. You may make one (1) back up copy of the object code of the Software for archival purposes only. Evaluation Software will be run in a lab, nonproductive environment. Results of any benchmark or other performance tests may not be disclosed to any third party without our prior written consent. Title to and ownership of the Software and Documentation, and all copyright, patent, trade secret, trademark, and other intellectual property rights in the System, shall remain our or our licensors' property. You shall not remove or alter any copyright or other proprietary rights notice on the System. We reserve all rights not expressly granted.

4. LIMITED WARRANTY: (a) Limited Warranty. We warrant to you that, commencing on your receipt of a Product and terminating 1 year thereafter, the System will perform substantially in accordance with its then-current appropriate Documentation. The Product (including replacements) may consist of new, used or previously-installed components. (b) Remedies. If the System fails to comply with such warranty during such period, as your sole remedy, you must return the same in compliance with our product return policy, and we shall, at our option, repair or replace the System, provide a workaround, or refund the fees you paid. Replacement Systems are warranted for the original System's remaining warranty period. (c) Exclusions. EVALUATION SOFTWWARE IS LICENSED ON AS-IS BASIS AND SUBJECT TO 4(d). We will have no obligation under this limited warranty due to: (i) negligence, misuse or abuse of the System, such as unusual physical or electrical stress, misuse or accidents; (ii) use of the System other than in accordance with the Documentation; (iii) modifications, alterations or repairs to the System made by a party other than us or our representative; (iv) the combination, operation or use of the System with equipment, devices, software or data not supplied by us; (v) any third party hardware or Third Party Software, whether or not provided by us; (vi) any failure other than by us to comply with handling, operating, environmental, storage or maintenance requirements for the System in the Documentation, including, without limitation, temperature or humidity ranges. (d) Disclaimers. We are not responsible for your software, firmware, information, or data contained in, stored on, or integrated with any Product returned to us for repair or replacement. SUCH

LIMITED WARRANTY IS IN LIEU OF, AND WE SPECIFICALLY DISCLAIM, ANY AND ALL OTHER WARRANTIES, WHETHER EXPRESS, IMPLIED OR STATUTORY, INCLUDING, BUT NOT LIMITED TO, ANY IMPLIED WARRANTIES OF SATISFACTORY QUALITY, MERCHANTABILITY, FITNESS FOR A PARTICULAR PURPOSE OR NON-INFRINGEMENT. WE DO NOT WARRANT THAT THE SYSTEM WILL MEET YOUR REQUIREMENTS OR BE UNINTERRUPTED OR ERROR-FREE. NO ADVICE OR INFORMATION, WHETHER ORAL OR WRITTEN, OBTAINED FROM US OR ELSEWHERE, WILL CREATE ANY WARRANTY NOT EXPRESSLY STATED IN THIS AGREEMENT. Some jurisdictions do not allow the exclusion of implied warranties or limitations on how long an implied warranty may last, so such exclusions may not apply to you. In that event, such implied warranties or limitations are limited to 60 days from the date you purchased the System or the shortest period permitted by applicable law, if longer. This warranty gives you specific legal rights and you may have other rights which vary from state to state or country to country.

5. LIMITATION OF LIABILITY: WE AND OUR AFFILIATES, SUPPLIERS, LICENSORS, OR SALES CHANNELS ("REPRESENTATIVES") SHALL NOT BE LIABLE TO YOU FOR ANY SPECIAL, INCIDENTAL, CONSEQUENTIAL, PUNITIVE, OR EXEMPLARY DAMAGES OF ANY KIND, INCLUDING BUT NOT LIMITED TO LOST REVENUES, PROFITS OR SAVINGS, OR THE COST OF SUBSTITUTE GOODS, HOWEVER CAUSED, UNDER CONTRACT, TORT, BREACH OF WARRANTY, NEGLIGENCE, OR OTHERWISE, EVEN IF WE WERE ADVISED OF THE POSSIBILITY OF SUCH LOSS OR DAMAGES. NOTWITHSTANDING ANY OTHER PROVISIONS OF THIS AGREEMENT, WE AND OUR REPRESENTATIVES' TOTAL LIABILITY TO YOU ARISING FROM OR RELATING TO THIS AGREEMENT OR THE SYSTEM SHALL BE LIMITED TO THE TOTAL PAYMENTS TO US UNDER THIS AGREEMENT FOR THE SYSTEM. THE FOREGOING LIMITATIONS SHALL NOT APPLY TO DEATH OR PERSONAL INJURY TO PERSONS OR TANGIBLE PROPERTY IN ANY JURISDICTION WHERE APPLICABLE LAW PROHIBITS SUCH LIMITATION. YOU ARE SOLELY RESPONSIBLE FOR BACKING UP YOUR DATA AND FILES, AND HEREBY RELEASE US AND OUR REPRESENTATIVES FROM ANY LIABILITY OR DAMAGES DUE TO THE LOSS OF ANY SUCH DATA OR FILES. SOME JURISDICTIONS DO NOT ALLOW THE EXCLUSION OR LIMITATION OF INCIDENTAL OR CONSEQUENTIAL DAMAGES, SO SUCH EXCLUSIONS MAY NOT APPLY TO YOU.

6. CONFIDENTIALITY: Information in the System and the associated media, as well as the structure, organization and code of the Software, are proprietary to us and contain valuable trade secrets developed or acquired at great expense to us or our suppliers. You shall not disclose to others or utilize any such information except as expressly provided herein, except for information (i) lawfully received by the user from a third party which is not subject to confidentiality obligations; (ii) generally available to the public without breach of this Agreement; (iii) lawfully known to the user prior to its receipt of the System; or (iv) required by law to be disclosed.

7. SUPPORT: Updates, upgrades, fixes, maintenance or support for the System (an "Upgrade") after the limited warranty period may be available at separate terms and fees from us. Any Upgrades shall be subject to this Agreement, except for additional or inconsistent terms we specify. Upgrades do not extend the limited warranty period.

8. TERM; TERMINATION: The term of this Agreement shall continue unless terminated in accordance with this Section. We may terminate this Agreement at any time upon default by you of the license provisions of this Agreement, or any other material default by you of this Agreement not cured with thirty (30) days after written notice thereof. You may terminate this Agreement any time by terminating use of the System. Except for the first sentence of Section 2 ("License") and for Section 4(a) ("Limited Warranty"), all provisions of this Agreement shall survive termination of this Agreement. Upon any such termination, you shall certify in writing such termination and non-use to us.

9. EXPORT CONTROL: You agree that the Products and Software will not be shipped, transferred, or exported into any country or used in any manner prohibited by the United States Export Administration Act or any other export laws, restrictions, or regulations (the "Export Laws"). You will indemnify, defend and hold us harmless from any and all claims arising therefrom or relating thereto. In addition, if the Products or Software are identified as export controlled items under the Export Laws, you represent and warrant that you are not a citizen, or otherwise located within, an embargoed nation (including without limitation Iran, Iraq, Syria, Sudan, Libya, Cuba, North Korea, and Serbia) and that you are not otherwise prohibited under the Export Laws from receiving the Software. All rights to the Products and Software are granted on condition that such rights are forfeited if you fail to comply with the terms of this Agreement.

10. U.S. GOVERNMENT RIGHTS: The Software and the documentation which accompanies the Software are "Commercial Items," as that term is defined at 48 C.F.R. §2.101, consisting of "Commercial Computer Software" and "Commercial Computer Software Documentation," as such terms are used in 48 C.F.R. §12.212 or 48 C.F.R. §227.7202, as applicable. Consistent with 48 C.F.R. §12.212 or 48 C.F.R. §§227.7202-1 through 227.7202-4, as applicable, the Commercial Computer Software and Commercial Computer Software Documentation are being licensed to U.S. Government as end users (a) only as Commercial Items and (b) with only those rights as are granted to all other end users pursuant to the terms and conditions herein. Harmonic, 4300 North First Street, San Jose, CA 95134 U.S.A.

11. GENERAL: You shall not assign, delegate or sublicense your rights or obligations under this Agreement, by operation of law or otherwise, without our prior written consent, and any attempt without such consent shall be void. Subject to the preceding sentence, this Agreement binds and benefits permitted successors and assigns. This Agreement is governed by California law, without regard to its conflicts of law principles. The U.N. Convention on Contracts for the International Sale of Goods is disclaimed. If any claim arises out of this Agreement, the parties hereby submit to the exclusive jurisdiction and venue of the federal and state courts located in Santa Clara County, California. In addition to any other rights or remedies, we shall be entitled to injunctive and other equitable relief, without posting bond or other security, to prevent any material breach of this Agreement. We may change the terms, conditions and pricing relating to the future licensing of our Systems and other intellectual property rights, including this Agreement, from time to time. No waiver will be implied from conduct or failure to enforce rights nor effective unless in a writing signed on behalf of the party against whom the waiver is asserted. If any part of this Agreement is found unenforceable, the remaining parts will be enforced to the maximum extent permitted. There are no third-party beneficiaries to this Agreement. We are not bound by additional and/or conflicting provisions in any order, acceptance, or other correspondence unless we expressly agree in writing. This Agreement is the complete and exclusive statement of agreement between the parties as to its subject matter and supersedes all proposals or prior agreements, verbal or written, advertising, representations or communications concerning the System.

Every reasonable attempt has been made to comply with all licensing requirements for all components used in the system. Any oversight is unintentional and will be remedied if brought to the attention of Harmonic at support@harmonicinc.com.

© 2013 Harmonic Inc. All rights reserved.

Documentation Conventions

This guide may use some special symbols and fonts to call your attention to important information. The following symbols appear throughout this guide:

DANGER: The Danger symbol calls your attention to information that, if ignored, can cause physical harm to you.

CAUTION: The Caution symbol calls your attention to information that, if ignored, can adversely affect the performance of your Harmonic product, or that can make a procedure needlessly difficult.

LASER DANGER: The Laser symbol and the Danger alert call your attention to information about the lasers in this product that, if ignored, can cause physical harm to you.

NOTE: The Note symbol calls your attention to additional information that you will benefit from heeding. It may be used to call attention to an especially important piece of information you need, or it may provide additional information that applies in only some carefully delineated circumstances.

IMPORTANT: The Important symbol calls your attention to information that should stand out when you are reading product details and procedural information.

TIP: The Tip symbol calls your attention to parenthetical information that is not necessary for performing a given procedure, but which, if followed, might make the procedure or its subsequent steps easier, smoother, or more efficient.

In addition to these symbols, this guide may use the following text conventions:

Convention	Explanation
`Typed Command`	Indicates the text that you type in at the keyboard prompt.
<Ctrl>, <Ctrl>+<Shift>	A key or key sequence to press.
Links	The *italics in blue* text to indicate Cross-references, and hyperlinked cross-references in online documents.
Bold	Indicates a button to click, or a menu item to select.
`ScreenOutput`	The text that is displayed on a computer screen.
Emphasis	The *italics* text used for emphasis and document references.

NOTE: You require Adobe Reader or Adobe Acrobat version 6.0 or later to open the PDF files. You can download Adobe Reader free of charge from www.adobe.com.

© 2013 Harmonic Inc. All rights reserved.

Contents

Introduction 1

Media Application Server Models 1
System Software Release Packaging 1
System Compatibility 1
- Browsers 2
- Operating Systems 2
- Media Players 2
- Hardware and Software Compatibility 2
- Maximum Supported Transfers Per Host 3

Media Application Server System Documentation Suite 3
- Locating the Latest Documentation on the Harmonic Web Site 4

Technical Support 4

Chapter 1: System Components 5

Media Application Server 5
- Bezel 5
- Front Panel 6
- Hard Drive Indicators 8
- Rear Panel 9
- Power Supply Indicator 10
- Network Interface Card Indicators 11

High Capacity Media Application Server 12
- Front Panel 12
- Hard Drive Indicators 13
- Rear Panel 14
- Power Supply Indicators 15
- Network Interface Card Indicators 16

BrowseStore 17
ProxyGenerator 17
- Front Panel 17
- Rear Panel 18
- Network Interface Card Indicators 19

JobScaler 20
- Front Panel 20
- System Status Indicators 22
- Hard Drive Indicators 23
- Rear Panel 23
- Network Interface Card Indicators 24

Chapter 2: System Installation 26

Requirements 26
Deployment Configurations 26
- Media Application Server in a Standalone Configuration 27

© 2013 Harmonic Inc. All rights reserved.

Media Application Servers in a High Availability Configuration 27
Media Application Servers in a Cluster Configuration 29
Getting Started 30
Preparing the Site 30
Unpacking and Inspecting the Media Application Server 31
Installing the Media Application Server in a Rack 31
Installing a Standalone Configuration 32
Connecting the Media Application Server to the Network 32
Powering up and Configuring the Media Application Server 33
Installing a High Availability Configuration 36
Connecting the Media Application Servers to the Network 36
Powering Up and Configuring the Media Application Servers 38
Installing a Cluster Configuration 42
Connecting the Media Application Servers to the Network 42
Powering Up and Configuring the Media Application Servers 44
Installing a ProxyGenerator 50
Installing a JobScaler 52

Chapter 3: System Set Up and Configuration 54

Logging on to ProXplore 54
Verifying the Media Application Server License 54
Installing the Media Application Server License File 55
Verifying Media Application Server Services 55
Setting the Media Application Server Time Zone 55
Configuring the Media Application Server 56
Importing SystemManager Configuration Information 56
Licensing File Systems 57
Transferring the License 57
Managing File Systems 57
Synchronizing File Systems 58
Scheduling a Remote Database Backup 58
Scheduling a Local Database Backup 58
Enabling JobScalers to Consume Jobs 59
Enabling ProxyGenerators to Consume Jobs 59
Creating BrowseStores 59
Licensing Other Harmonic Devices 60
Viewing the Software Versions for Managed Devices 60

Chapter 4: Software Upgrade and Reinstallation 61

Backing Up the Database 61
Scheduling a Local Database Backup 61
Scheduling a Remote Database Backup 61
Upgrading a Standalone Configuration 62
Upgrading the Software 62
Rebooting a Standalone Configuration 63
Shutting Down a Standalone Configuration 63

© 2013 Harmonic Inc. All rights reserved.

Upgrading a High Availability Configuration 63
Upgrading the Software 63
Rebooting a High Availability Configuration 64
Repairing the Database on a High Availability Configuration 65
Shutting Down a High Availability Configuration 65
Upgrading a Cluster Configuration 65
Upgrading Software on the DB Nodes 66
Upgrading Software on the App Nodes 67
Rebooting a Cluster Configuration 68
Shutting Down a Cluster Configuration 68
Reinstalling a Standalone Configuration 69
Reinstalling the Operating System 69
Reinstalling the Software 71
Reconfiguring the Media Application Server 73
Reinstalling a High Availability Configuration 75
Reinstalling the Operating System 75
Reinstalling the Software 76
Reinstalling a Cluster Configuration 81
Before You Begin 81
Reinstalling the Operating System 81
Reinstalling the Software 82

Appendix A: Contacting the Technical Assistance Center 90

Appendix B: Compliance, Safety, and Agency Approvals..... 92

© 2013 Harmonic Inc. All rights reserved.

Introduction

This guide provides a detailed orientation to the Media Application Server™ (MAS) platform 3.6.2, as well as installation instructions for MAS system components, web interface, the ProXchange ™ system, and the ProBrowse™ system.

The following topics are covered in this section:

- *Media Application Server Models*
- *System Software Release Packaging*
- *System Compatibility*
- *Media Application Server System Documentation Suite*
- *Technical Support*

Media Application Server Models

The Media Application Server 3.6.2 is available in the following models:

Model	Description
MAS-1000	One 1U rackmount server for use by ProBrowse, ProXchange, and ProXplore.
MAS-1100	Two 1U rackmount servers for use by ProBrowse, ProXchange, and ProXplore. Installed as a two-node, high availability (HA) configuration.
MAS-2000	One 2U rackmount server for use by ProBrowse, ProXchange, and ProXplore. Includes an integrated BrowseStore with six disks for storing proxies.
MAS-2100	Two 2U rackmount servers for use by ProBrowse, ProXchange, and ProXplore. Includes an integrated BrowseStore with six disks for storing proxies. Installed as a two-node, high availability (HA) configuration.

System Software Release Packaging

Software updates are available from the Support Server. The components of Release 3.6.2 are available at the following location:

http://support.omneon.com/Updates/Omneon/Current/MediaApplicationServer/3.6.2.0.

The full download contains several files:

- MAS-v3.6.2.0-Documentation.exe -Media Application Server Installation Guide, Media Application Server User Guide, and the Release Notes
- MAS-v3.6.2.0-Software.exe -System Software

System Compatibility

The Media Application Server is compatible with the following operating systems and browsers:

© 2013 Harmonic Inc. All rights reserved.

Browsers

Browser	Minimum Version
Microsoft Internet Explorer	6.0
Mozilla Firefox	2.0.0.3
Apple Safari	3.0.2

Operating Systems

Operating System	Minimum Version
Windows XP	Service Pack 2
Mac OS	10.5
Linux	Fedora Core 7 with 2.6.18.rhel5 kernel

Media Players

Operating System	Minimum Version
Adobe Flash Player	10.0.22
QuickTime Player	7.6.6

NOTE: Adobe Flash Player is required for all browsers. Download Flash Player from *http://www.adobe.com/downloads* if this version is not installed on your system.

NOTE: QuickTime is used to play content within the Media Application Server Pro Application Portal (GUI). Make sure that version 7.6.6 is installed on your system before using the Media Application Server. Download this version from *http://www.apple.com/quicktime/download/* if this version is not installed on your system.

Hardware and Software Compatibility

The Media Application Server 3.6.2 supports the following versions of Harmonic products and services:

Firmware	Supported Version	Comments
SystemManager	5.24	Required
Spectrum	6.3.1.1, 6.4.2, 7.0, 7.1, 7.2	7.0 required for IPV storage servers
MediaCenter	6.3.1.1, 6.4.2, 7.0, 7.1, 7.2	
MediaDeck	6.3.1.1, 6.4.2, 7.0, 7.1, 7.2	
MediaDeck 7000	6.3.1.1, 6.4.2, 7.0, 7.1, 7.2	

© 2013 Harmonic Inc. All rights reserved.

Firmware	Supported Version	Comments
Harmonic MediaGrid	3.0, 3.0.1, 3.1.1, 3.2	
Media API	6.2, 6.3, 6.4, 7.0, 7.1, 7.2	
Player API	6.2, 6.3, 6.4, 7.0, 7.1, 7.2	
Harmonic MediaGrid API	3.0	
ProBrowse Generator	2.6.0.1	If you have a ProBrowse Generator, 2.6.0.1 is required
ProXchange JobScaler	1.7.0.4	
ProMedia Workflow System (WFS)	1.4.4, 1.4.6	

Maximum Supported Transfers Per Host

Below are the maximum active transfer reads/writes and maximum FTP reads/writes supported by Media Application Server per transfer host. The numbers default to different values based on the type of transfer host:

Maximum Active Transfer Reads	5
Maximum Active Transfer Writes	5
Maximum FTP Reads/Writes	16
Maximum FTP Reads/Writes for ContentBridge (CB)	16
Maximum FTP Reads/Writes for High Bandwidth ContentBridge (HCBCB)	24

NOTE: Contact Technical Support (*Appendix A, Contacting the Technical Assistance Center*) for suggestions regarding limits for your specific media format and workflow.

Media Application Server System Documentation Suite

The following table describes the items that comprise the Media Application Server System Documentation Suite.

This document...	Provides this information...
Media Application Server Installation and Configuration Guide (this guide)	installing and performing basic configuration of the Media Application Server using the Media Application Server interface
Media Application Server Users Guide	using the Media Application Server interface to perform tasks

© 2013 Harmonic Inc. All rights reserved.

This document...	Provides this information...
Media Application Server Troubleshooting Guide	troubleshooting and diagnostic information
Media Application Server Release Notes	last minute information about the Media Application Server product release

For the SystemManager documentation, navigate to:

ftp://ftp.omneon.com/Updates/Omneon/Current/SystemManager

SystemManager documents are packaged as follows:

- **SystemManager-v<version>-Documentation.exe** contains the Release Notes and Installation Guide
- **SystemManager-v<version>-Software.exe** contains the all other components of the SystemManger documentation suite.

All items are packaged in self-extracting files and available for download from the Support Server at the following location: *http://support.omneon.com/Updates/Omneon/Current*

All files on the Support Server are password protected. Contact Technical Support if you need assistance with unlocking the files (see *Contacting the Technical Assistance Center*).

Acrobat ® Reader® is needed to view the product documentation. Download this for free from: *http://www.adobe.com*

Locating the Latest Documentation on the Harmonic Web Site

The latest product technical documentation, as well as information provided for previous releases, is available at:

http://www.harmonicinc.com/documents-detail

Technical Support

See *Contacting the Technical Assistance Center* for information on contacting Technical Support.

© 2013 Harmonic Inc. All rights reserved.

Chapter 1
System Components

This section provides an overview of the hardware components of a Media Application Server. Choose from the following topics:

- *Media Application Server*
- *High Capacity Media Application Server*
- *BrowseStore*
- *ProxyGenerator*
- *JobScaler*

Media Application Server

The Media Application Server, delivered as both a hardware and software appliance, provides centralized management of content by decoupling client computers and data storage operations from media management and application processing. MAS can generate proxies, transcode media, and manage content delivery with little human intervention. MAS provides a system database for tracking content and storing rules and metadata, and a messaging bus for ease of integration. Through the integration of third-party applications, MAS supports tasks such as archive management, quality control, content repurposing, branding, and graphics compositing.

Bezel

Figure 1–1 and *Table 1–1* show components of the Media Application Server bezel.

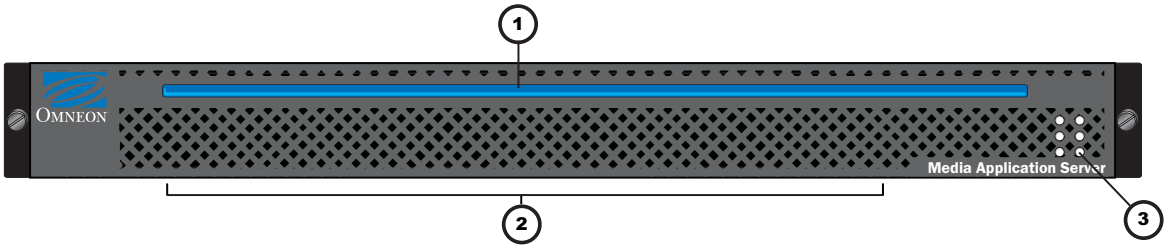

Figure 1–1: Media Application Server Bezel

© 2013 Harmonic Inc. All rights reserved.

Table 1–1: Bezel Components

Indicator, Button, or Connector	Description
1. Power indicator	A bright blue **power indicator** is provided across the top of the front panel. This indicator also provides a “wink” function, which allows you to identify a unit from the SystemManager application.
2. Air vents	Allows airflow through the unit. For optimum airflow, do not obstruct the air vents.
3. Status LEDs	An array of six **status LEDs** is provided on the front panel. See the following figure and table for descriptions of each status LED.

Front Panel

Several Media Application Server services are monitored during system operation, with their status reported using the front panel indicators. Each indicator, identified below, represents a different system.

Figure 1–2 and *Table 1–2* describe the Media Application Server system status indicator patterns.

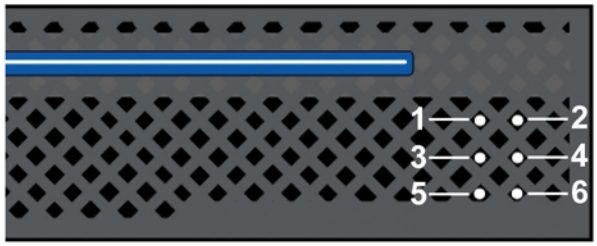

Figure 1–2: Front Panel Indicators

© 2013 Harmonic Inc. All rights reserved.

Table 1–2: Front Panel Indicators

LED	Color	Description
1. Ethernet Port 1	Cyan	All checks passed. **Note**: The following checks are performed: Enabled, Link, Speed, IP Address.
	Blue	One of the checks failed.
2. Ethernet Port 2 (if HA is not configured)	Cyan	All checks passed. **Note**: The following checks are performed: Enabled, Link, Speed, IP Address.
	Blue	One of the checks failed.
2. Ethernet Port 2 (if HA is configured)	Green	Active
	Magenta	Standby
	Yellow	Not running
	White	Standalone
3. RAID LED	Cyan	The status of the RAID is optimal.
	Blue	The status of the RAID is anything other than optimal.
4. Software Monitor LED	Cyan	All Media Application Server services (msf-app-server, msf-db, msf-rpc) are running.
	Blue	Some services are not running.
	Red	All services are stopped.
5. Active Job LED	Cyan	Some jobs are in progress.
	Blue	No jobs are in progress.
	Black	Unable to query data.
6. Job Statistics LED	Cyan	No job has failed today.
	Green	Less than 10 percent of the jobs have failed today.
	Blue	More than 10 percent and less than 50 percent of the jobs have failed today.
	Red	More than 50 percent of the jobs have failed today.
	Black	Unable to query data.

NOTE: The LEDs are yellow while the system starts up and when the front panel is attached.

Figure 1–3 and *Table 1–3* detail the front panel view of a the Media Application Server with the bezel removed. Note that your Media Application Server may differ somewhat from the one described below.

© 2013 Harmonic Inc. All rights reserved.

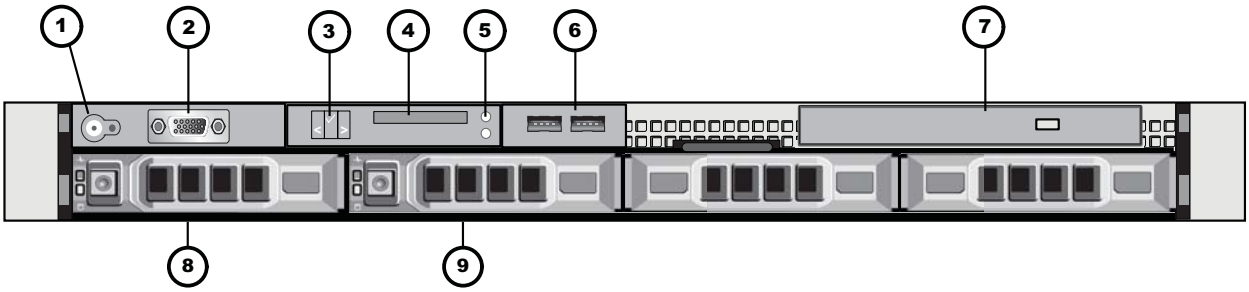

Figure 1–3: Media Application Server Front Panel

Table 1–3: Front Panel Components

Indicator, Button, or Connector	Description
1. Power-on indicator/button	The power button controls the DC power supply output to the system. The power-on indicator lights when the system power is on. When the power-on indicator is off, this indicates that no power is supplied to the system.
2. Video connector	Connects a monitor to the system.
3. LCD menu buttons	Allows you to navigate the control panel LCD menu.
4. LCD display	Provides status information and system error messages. The LCD display lights during normal system operation. Both the systems management software and the identification buttons located on the front and back of the system can cause the LCD to flash blue to identify a particular system. The LCD display lights amber when the system needs attention due to a problem with power supplies, fans, system temperature or hard drives. **Note**: If the system is connected to AC power and an error has been detected, the LCD display lights amber regardless of whether the system has been powered on.
5. System ID button	Pressing this button will cause the Front LCD display and the system status indicator on the rear panel to blink.
6. USB connectors	Use to connect the front bezel.
7. Optical drive	Use for software installation.
8. Hard drive 0	Refer to *Table 1–4* for a description of the indicator codes.
9. Hard drive 1	

Hard Drive Indicators

Figure 1–4 and *Table 1–4* describe the typical hard drive indicators and their functions.

© 2013 Harmonic Inc. All rights reserved.

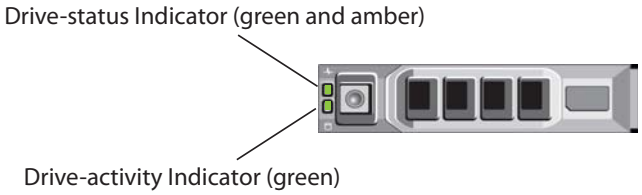

Figure 1–4: Media Application Server Hard Drive Indicators

Table 1–4: Hard Drive Indicators (RAID only)

Indicator Pattern	Condition
Blinks green two times per second	Identify drive/preparing for removal.
Off	Drive ready for insertion or removal. **Note**: The drive-status indicator remains off until all hard drives are initialized after system power is applied. Drives are not ready for insertion or removal during this time.
Blinks green, amber, and off	Drive predicted failure.
Blinks amber four times per second	Drive failed.
Blinks green slowly	Drive rebuilding.
Steady green	Drive online.
Blinks green three seconds, amber three seconds, and off six seconds	Rebuild aborted.

Rear Panel

Figure 1–5 and *Table 1–5* describe the rear panel components of the Media Application Server.

© 2013 Harmonic Inc. All rights reserved.

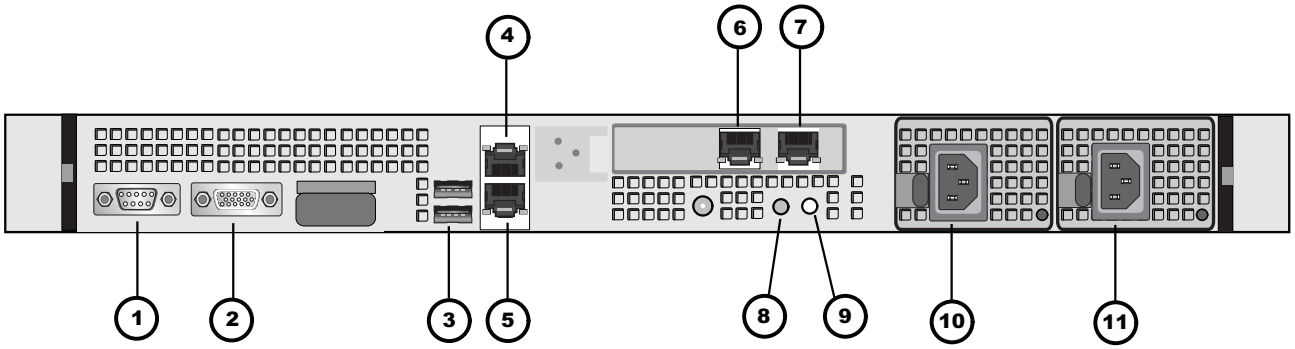

Figure 1–5: Media Application Server Rear Panel

Table 1–5: Rear Panel Components

Indicator, Button, or Connector	Description
1. Serial connector	Use to connect a serial device to the system.
2. Video connector	Use to connect a monitor to the system (for maintenance only).
3. USB connectors (2)	Used for maintenance purposes only.
4. NIC 0 connector	Use for Gigabit Ethernet connection to switch.
5. NIC 1 connector	Use for Gigabit Ethernet connection to switch.
6. NIC 2 connector	Use for Gigabit Ethernet connection to switch.
7. NIC 3 connector	Use for Gigabit Ethernet connection to switch.
8. System status indicator	Blinks when the front or back system identification button is pressed.
9. System ID button	Both the SystemManager application and the identification buttons on the front and back panels can be used to locate a particular system within a rack. When one of these buttons is pressed, the LCD display on the front of the device and the blue system status indicator on the back blink until one of the buttons is pressed again.
10. Power supply 1	Dual redundant power supplies provide power to the system.
11. Power supply 2	

Power Supply Indicator

Figure 1–6 and *Table 1–6* describe power supply indicator and its functions.

© 2013 Harmonic Inc. All rights reserved.

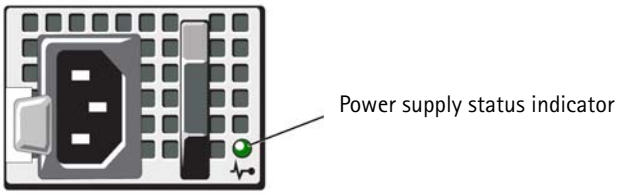

Figure 1–6: Media Application Server Power Supply Indicator

Table 1–6: Power Supply Indicator

Indicator Pattern	Condition
Not lit	AC power is not connected.
Green	In standby mode, indicates that a valid AC source is connected to the power supply, and that the power supply is operational. When the system is on, it also indicates that the power supply is providing DC power to the system.
Amber	Indicates a problem with the power supply.
Alternating green and amber	When hot-adding a power supply, this indicates that the power supply is mismatched with the other power supply (a high output power supply and a Energy Smart power supply are installed in the same system). To correct this, replace the power supply that has the flashing indicator with a power supply that matches the capacity of the other installed power supply.

Network Interface Card Indicators

Each NIC on the rear panel has an indicator that provides information on network activity and link status. *Figure 1–7*, and *Table 1–7* detail the NIC indicators and the possible states of each.

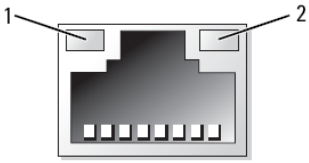

Figure 1–7: Media Application Server NIC Indicators

1. Link indicator	2. Activity indicator

Note that the indicator codes for NIC 0 and NIC 1 differ from NIC 2 and NIC 3. Refer to *Table 1–7*.

© 2013 Harmonic Inc. All rights reserved.

Table 1–7: NIC Indicator Codes

NIC 0 and NIC 1 Indicators	NIC 2 and NIC 3 Indicators	Connection Status
Link and activity indicators are off		NIC is not connected.
Link indicator is green	Link indicator is amber	NIC is connected to a valid link on the network.
Link indicator is amber	Link indicator is green or blinking green	NIC is connected to a valid network link at 10/100 Mbps.
Activity indicator is amber blinking	Activity indicator is green blinking	Data is being sent or received over the network.

High Capacity Media Application Server

Front Panel

Figure 1–8 and *Table 1–8* detail the front panel components of the High Capacity Media Application Server with the bezel removed.

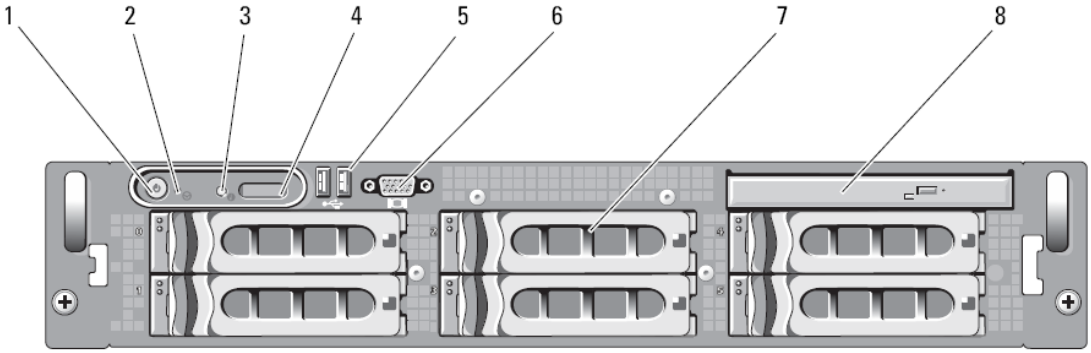

Figure 1–8: High Capacity Media Application Server Front Panel

© 2013 Harmonic Inc. All rights reserved.

Table 1–8: Front Panel Components

Indicator, Button, or Connector	Description
1.Power-on indicator, power button	The power-on indicator lights when the system power is on. The power button controls the DC power supply output to the system. **Note**: If you turn off the system using the power button and the system is running an ACPI-compliant operating system, the system performs a graceful shutdown before the power is turned off. If the system is not running an ACPI-compliant operating system, the power is turned off immediately after the power button is pressed.
2. NMI	Used to troubleshoot software and device driver errors when using certain operating systems. This button can be pressed using the end of a paper clip. Use this button only if directed to do so by qualified support personnel or by the operating system's documentation.
3. System identification button	The identification buttons on the front and back panels can be used to locate a particular system within a rack. When one of these buttons is pushed, the LCD panel on the front and the blue system status indicator on the back blink until one of the buttons is pushed again.
4. LCD panel	Provides system ID, status information, and system error messages. The LCD lights during normal system operation. Both the systems management software and the identification buttons located on the front and back of the system can cause the LCD to flash blue to identify a particular system. The LCD lights amber when the system needs attention, and the LCD panel displays an error code followed by descriptive text. **Note**: If the system is connected to AC power and an error has been detected, the LCD lights amber regardless of whether the system has been powered on.
5. USB connectors (2)	Connects USB 2.0-compliant devices to the system.
6. Video connector	Connects a monitor to the system.
7. Hard drives (six 1-TB drives)	Six 3.5-inch hot plug.
8. Optical drive (optional)	One optional slimline IDE or DVD drive.

Hard Drive Indicators

Figure 1–9 and *Table 1–9* describe the typical hard drive indicators and their functions.

© 2013 Harmonic Inc. All rights reserved.

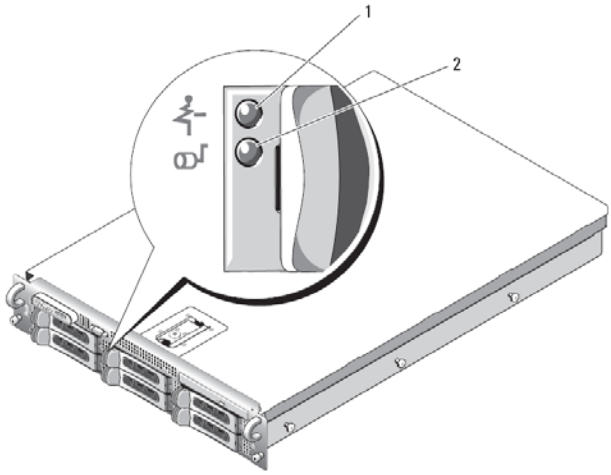

Figure 1–9: Media Application Server Hard Drive Indicators

1. Drive-status indicator (green and amber)	2. Drive-activity indicator (green)

Table 1–9: Hard Drive Indicators

Condition	Drive-Status Indicator Pattern
Identify drive/preparing for removal	Blinks green two times per second
Drive ready for insertion or removal	Off
Drive predicted failure	Blinks green, amber, and off
Drive failed	Blinks amber four times per second
Drive rebuilding	Blinks green slowly
Drive online	Steady green
Rebuild aborted	Blinks green three seconds, amber three seconds, and off six seconds

Rear Panel

Figure 1–10 and *Table 1–10* describe the rear panel components of a high-capacity Media Application Server.

© 2013 Harmonic Inc. All rights reserved.

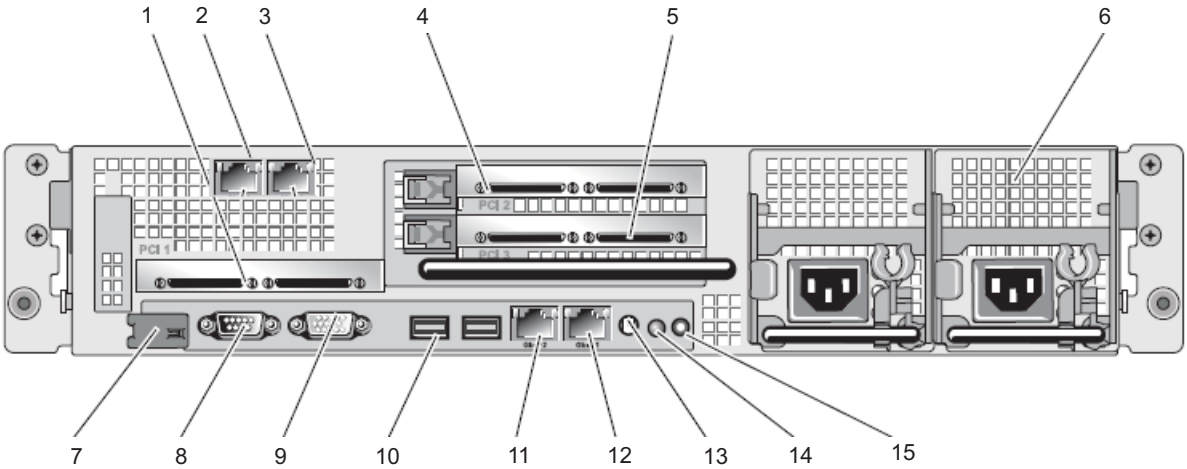

Figure 1–10: High Capacity Media Application Server Rear Panel

Table 1–10: Rear Panel Components

Indicator or Feature	
1. Center PCI riser (slot 1)	9. System status indicator connector
2. NIC2 connector	10. NIC0 connector
3. NIC3 connector	11. NIC1 connector
4. Left PCI riser (slot 2)	12. USB connectors (2)
5. Left PCI riser (slot 3)	13. Video connector
6. Power supplies (2)	14. Serial connector
7. System identification button	15. Remote access controller (optional)
8. System status indicator	

Power Supply Indicators

Figure 1–11 and *Table 1–11* describe typical redundant power supply indicators and their functions.

© 2013 Harmonic Inc. All rights reserved.

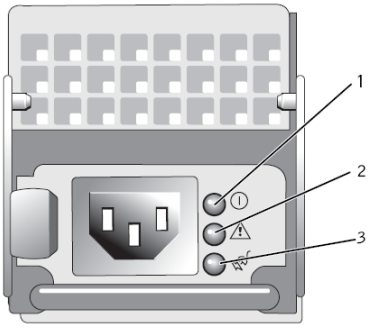

Figure 1–11: Media Application Server Power Supply Indicators

1. Power supply status indicator	2. Power supply fault indicator	3. AC line status indicator

Table 1–11: Power Supply Indicators

Indicator	Function
Power supply status	Green indicates the power supply is operational.
Power-supply fault	Amber indicates a problem with the power supply.
AC line status	Green indicates a valid AC source is connected to the power supply.

Network Interface Card Indicators

Figure 1–12 and *Table 1–12* describe the NIC indicators and the status of each.

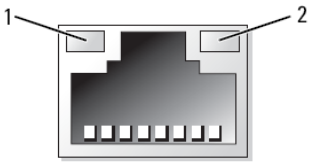

Figure 1–12: Media Application Server Network Interface Card Indicators

1. Link indicator	2. Activity indicator

© 2013 Harmonic Inc. All rights reserved.

Table 1–12: Network Interface Card Indicators

Indicator	Indicator Code
Link and activity indicators are off.	The NIC is not connected to the network.
Link indicator is green.	The NIC is connected to a valid link partner on the network.
Activity indicator is blinking yellow.	Network data is being sent or received.

BrowseStore

The BrowseStore is used for storing picons and low-res files known as proxies. The MAS appliance has a built-in BrowseStore.

ProxyGenerator

The ProxyGenerator is the engine for creating low-resolution proxies of your video content. It is managed by the SystemManager and consumes jobs from the Media Application Server. It requires its own run-time license.

Front Panel

Figure 1–13 and *Table 1–13* detail the front panel components of a ProxyGenerator with the front bezel removed.

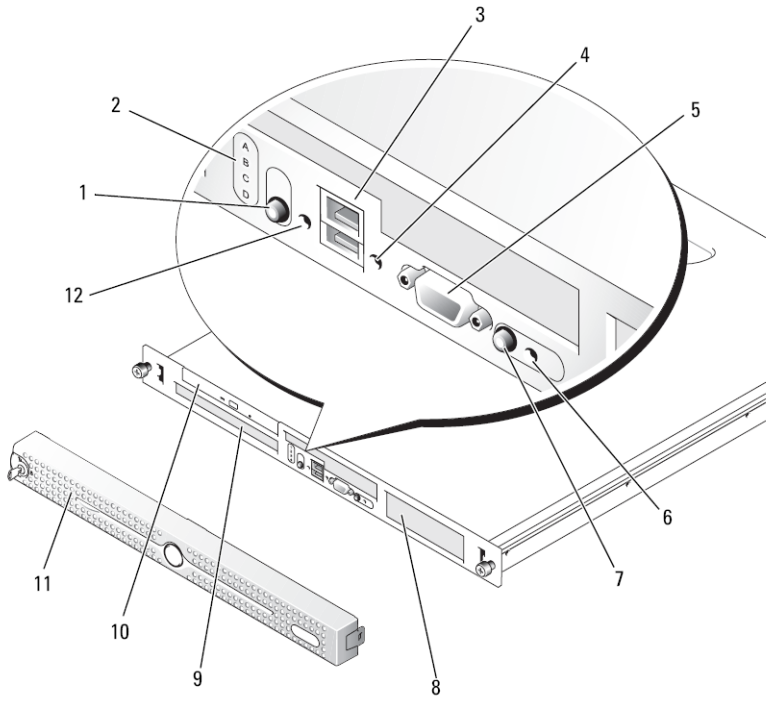

Figure 1–13: ProxyGenerator Front Panel

© 2013 Harmonic Inc. All rights reserved.

Table 1–13: Front Panel Components

Indicator, Button, or Connector	Description
1. Power-on indicator, power button	The power button turns system power off and on. The power-on indicator lights or blinks to indicate the status of power to the system. The power-on indicator lights when the system is on. The indicator is off when the system is off and power is disconnected from the system. The indicator blinks when the system is on but in standby state, or when the system is off but is still connected to the power source. To exit from the standby state, briefly press the power button.
2. Diagnostic indicators (4)	The diagnostic indicators aid in diagnosing and troubleshooting the system. See the documentation that ships with system for more information.
3. USB connectors	These are unused in a ProxyGenerator.
4. Hard-drive activity indicator	The green hard-drive activity indicator flashes when the hard drives are in use.
5. Video connector	Connects a monitor to the system.
6. System status indicator	The blue system status indicator lights up during normal system operation. The amber system status indicator flashes when the system needs attention due to a system problem.
7. System identification button	The system identification buttons on the front and back panels can be used to locate a particular system within a rack. When one of these buttons is pushed, the blue system status indicators on the front and back panels blink until one of the buttons is pushed again. You can also use the systems management software to cause the indicators to flash to identify a particular system.
8. Hard drive 1	Optional 3.5-inch SAS or SATA hard drive.
9. Hard drive 0	A 3.5-inch SAS or SATA hard drive.
10. Optical drive	Optional.
11. Bezel	Optional.

Rear Panel

© 2013 Harmonic Inc. All rights reserved.

Figure 1–14 and *Table 1–14* show the rear panel components of a ProxyGenerator.

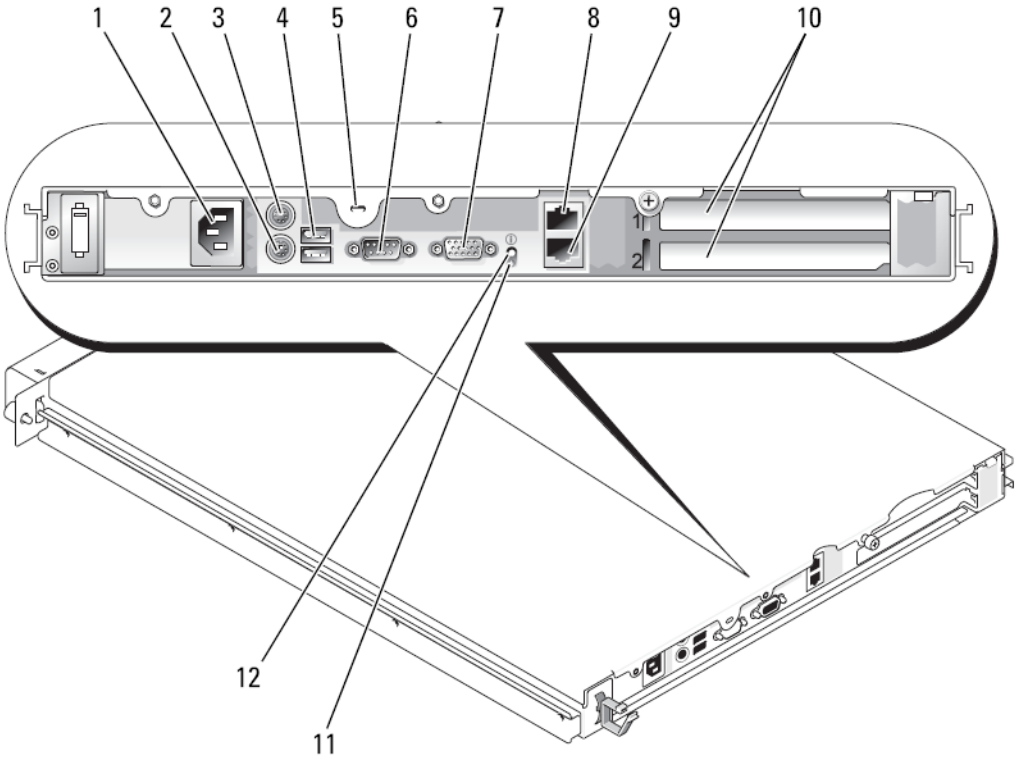

Figure 1–14: ProxyGenerator Rear Panel

Table 1–14: Rear Panel Components

Indicator, Button, or Connector		
1. Power supply connector	2. Keyboard connector	3. Mouse connector
4. USB connectors (2)	5. Kensington lock	6. Serial connector
7. Video connector	8. NIC 1 connector	9. NIC 2 connector
10. Expansion slots (2)	11. System status indicator	12. System identification button

Network Interface Card Indicators

Figure 1–15 and *Table 1–15* describe the NIC indicators and the status of each.

© 2013 Harmonic Inc. All rights reserved.

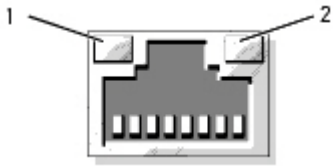

Figure 1–15: ProxyGenerator Network Interface Card Indicators

1. Link indicator	2. Activity indicator

Table 1–15: Network Interface Card Indicators

Indicator	Indicator Code
Link and activity indicators are off.	The NIC is not connected to the network.
Link indicator is green.	The NIC is connected to a valid link partner on the network.
Activity indicator is blinking yellow.	Network data is being sent or received.

JobScaler

ProXchange JobScalers can be added to a system to increase scalability and performance for parallel processing of transcode jobs by the ProXchange system. The JobScaler consumes jobs from MAS and distributes the transcode jobs to the Harmonic MediaGrid. It is managed by the SystemManager and requires its own run time license.

Front Panel

Figure 1–16 shows the front panel components of a JobScaler with the front bezel removed.

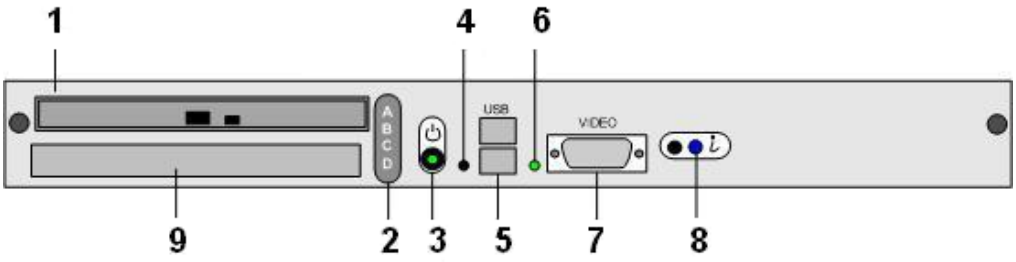

Figure 1–16: JobScaler Front Panel

© 2013 Harmonic Inc. All rights reserved.

Table 1–16: Front Panel Components

Indicator, Button, or Connector		
1. CD/DVD drive	4. NMI button	7. Video connector
2. Diagnostic indicators (4)	5. USB ports (2)	8. System status button and LED
3. Power button and LED	6. Hard-drive activity LED	9. Hard drive (80 GB)

Following are descriptions of each front panel section as identified above:

1. **Optical Drive**

SATA DVD-ROM drive.

2. **Diagnostic Indicators (4)**

The diagnostic LEDs aid in diagnosing and troubleshooting the system. For more information, see the Gigantic Indicator Codes section in the Dell documentation that ships with this unit.

3. **Power on Indicator, Power Button**

The **power button** controls the power input to the system's power supply. **The power-on LED lights or blinks to indicate the status of power to the system.**

- The power-on LED lights when the system is on.
- The power-on LED is off when power is disconnected from the system.
- The power-on LED blinks when power is supplied to the system but in standby state, and when the system is off but connected to the power source.

4. **NMI Button**

This button is not used in a JobScaler system.

5. **USB Connectors**

One USB connector is used to connect the front panel.

6. **Hard-drive Activity LED**

The green hard-drive activity LED flashes when the hard drives are being accessed.

7. **Video Connector**

Used for maintenance purposes only.

8. **System Status Indicator**

Can be used to locate a particular unit within a rack. After the **System ID Indicator** on the rear is pushed, the **system status LED** on the front of the unit flashes blue, making it easier to locate that unit from the front of a rack. The SystemManager application can also be used to locate a device.

- **Blue LED:** Indicates normal system operation.
- **Amber LED:** Indicates that the system needs attention due to a system problem.

9. **Hard Drive**

An 80-GB SATA hard drive is included.

© 2013 Harmonic Inc. All rights reserved.

System Status Indicators

Figure 1–17 and *Table 1–17* describe the JobScaler system status indicator patterns.

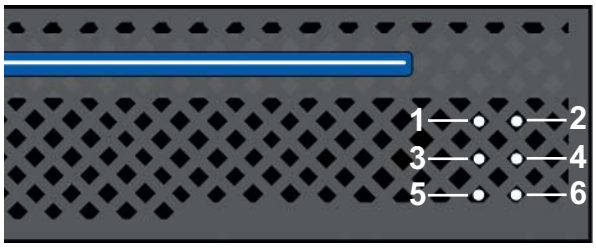

Figure 1–17: JobScaler Status Indicators

Table 1–17: System Status Indicators

LED	Color	Indicates
1. Ethernet port 1	Yellow	Power on.
	Blue	Inactive.
	White	Active (requires both a good Ethernet link status and completed IP configuration).
2. Ethernet port 2 (if used)	Yellow	Power on.
	Blue	Inactive.
	White	Active (requires both a good Ethernet link status and completed IP configuration).
3. Software monitor	Yellow	Power on.
	Blue	The JobScaler service is not running. This LED is white for 60 seconds prior to changing to blue when the system is starting up and when the front panel is attached after the system is started.
	White	Normal, healthy state.
4.Unused	Yellow	Power on.
	White	Normal, healthy state.
5. Job monitor (jobs running on this JobScaler only)	Yellow	Power on.
	Blue	No transcode job running.
	White	Transcode job running.
6. Unused	Yellow	Power on.
	White	Normal, healthy state.

© 2013 Harmonic Inc. All rights reserved.

Hard Drive Indicators

Figure 1–18 illustrates the hard drive indicators and status of each.

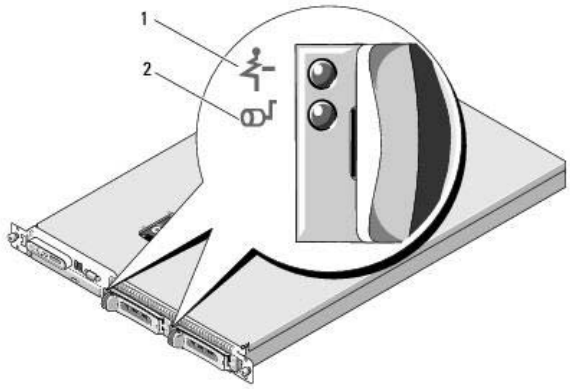

Figure 1–18: JobScaler Hard Drive Indicators

1. Drive-status indicator - green and amber	2. Drive-activity indicator - green during activity.

Rear Panel

Figure 1–19 and *Table 1–18* show the rear panel components of a JobScaler.

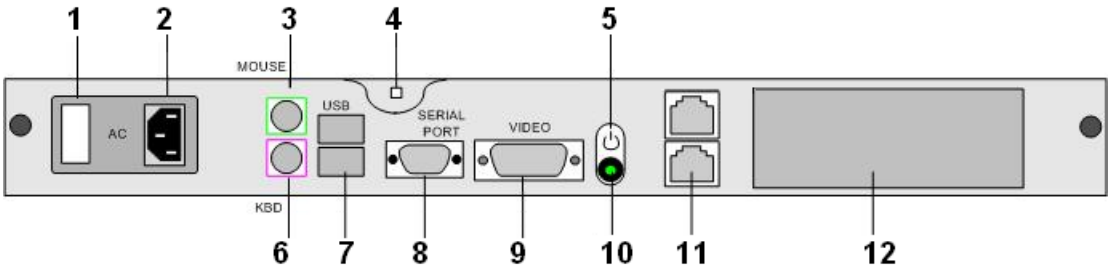

Figure 1–19: JobScaler Rear Panel

Table 1–18: Rear Panel Components

Indicator, Button, or Connector		
1. Service tag	5. System ID button	9. Video connector
2. Power supply	6. Keyboard connector	10. System status indicator
3. Mouse connector	7. USB connectors (2)	11. NIC 1 (top) and 2 (bottom) connectors
4. Kensington lock	8. Serial port connector	12. Expansion slots (2)

© 2013 Harmonic Inc. All rights reserved.

Following are descriptions of each rear panel section as identified above:

1. **Service Tag**

   Use the service tab number on the Dell Support site to get more information about the unit.

2. **Power Supply (1)**

   One AC IN connector is available on this unit.

3. **Mouse Connector**

   Used for maintenance purposes only.

4. **Kensington Lock**

   Used to connect security lock.

5. **System Identification Button**

   The **System ID Button** (also located on the front panel) can be used to locate a particular unit within a rack. Once the **System ID Button** on the rear is pushed, the **System Status LED** on the front of the unit flashes blue, making it easier to locate that unit from the front of a rack. The SystemManager application can also be used to locate a device.

6. **Keyboard Connector**

   Used for maintenance purposes only.

7. **USB Connectors (2)**

   Two 2.0-compliant USB connectors for maintenance purposes only.

8. **Serial Port Connector**

   Used for maintenance purposes only.

9. **Video Connector**

   Used for maintenance purposes only.

10. **System Status Indicator**

    The System Status LED can flash either blue or amber:

    - **Blue LED:** Indicates normal system operation.
    - **Amber LED:** Indicates that the system needs attention due to a system problem.

11. **NIC1 & NIC 2 Connectors**

    Two 12-pin RJ-45 connector (**LAN1 & LAN 2**) are provided for Ethernet connection (10/100/1000). A gigabit Ethernet connection is required

12. **Expansion Slots (2)**

Network Interface Card Indicators

Figure 1–20 illustrates the JobScaler NIC indicators and the status of each.

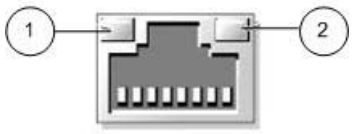

Figure 1–20: JobScaler Network Interface Card Indicators

© 2013 Harmonic Inc. All rights reserved.

Table 1–19: Network Interface Card Indicators

LED	Color	Indicates
1. Link indicator	Green	NIC is connected to a valid link on the network.
	Off	NIC is not connected.
2. Activity indicator	Blinking amber	Data is being sent or received over the network.
	Off	NIC is not connected.

© 2013 Harmonic Inc. All rights reserved.

Chapter 2
System Installation

This section includes information for installing and powering up your Media Application Server system.

- *Requirements*
- *Deployment Configurations*
- *Getting Started*
- *Installing a Standalone Configuration*
- *Installing a High Availability Configuration*
- *Installing a Cluster Configuration*
- *Installing a ProxyGenerator*
- *Installing a JobScaler*

Requirements

This section lists the requirements for installing the Media Application Server.

Harmonic SystemManager

Before installing a Media Application Server, the SystemManager must already be in place and functioning. Refer to the *Harmonic SystemManager Installation Guide* for instructions on installing a SystemManager platform.

NOTE: MAS version 3.6.2 supports SystemManager version 5.25. If you are running MAS 3.6.2, Harmonic recommends that you upgrade to SystemManager version 5.25. If you are running an older version of MAS (3.4.1 and older) do not upgrade to SystemManager 5.25. MAS versions 3.4 and 3.4.1 only support SystemManager 5.23.

Media Application Server Licenses

A Media Application Server license is required to log on to the Pro Application Portal GUI. Additional licenses are required to use the ProBrowse, ProXchange, and ProXplore applications.

The Media Access Control (MAC) address is a unique identifier attached to most networking devices. This software needs your unique MAC address to issue you a license.

IMPORTANT: You need to connect an Ethernet cable to NIC 0 on the back of the Media Application Server. Connect the other end of the cable to an available port on the client switch. Connect the cables to the same subnet as the SystemManager platform.

Monitor, Keyboard, Mouse, and Serial Cable

A monitor, keyboard, and mouse are required to access the Media Application Server and BrowseStore (if used), as well as a straight-through serial cable.

Deployment Configurations

The Media Application Server supports several deployment configurations.

© 2013 Harmonic Inc. All rights reserved.

Media Application Server in a Standalone Configuration

The following sample diagram (*Figure 2–1*) shows a standalone Media Application Server connected to both the Spectrum and Harmonic MediaGrid systems as well as two supporting appliances, the JobScaler and the ProxyGenerator. In this configuration, proxy files generated by the ProxyGenerator are stored on the Harmonic MediaGrid system.

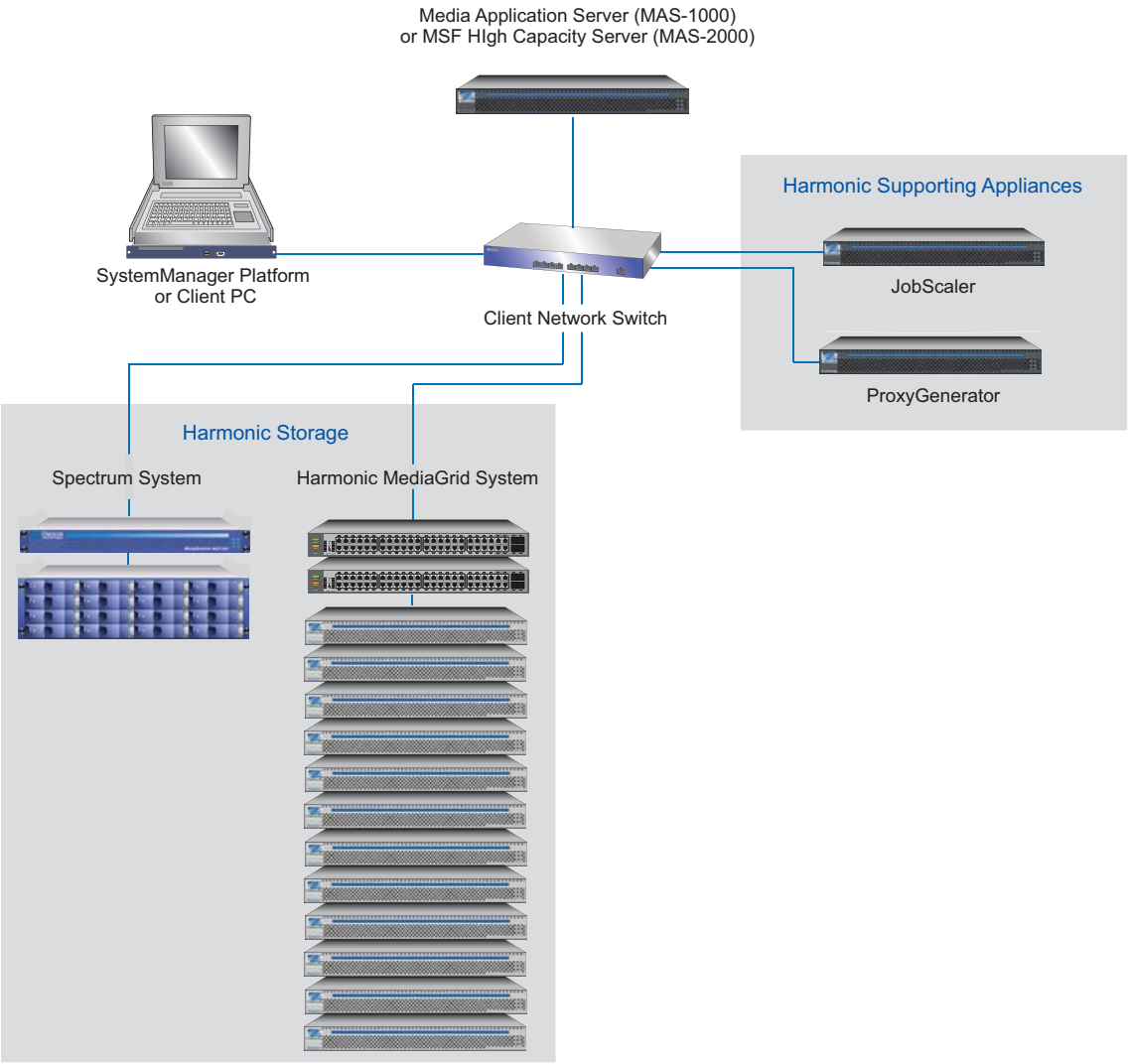

Figure 2–1: Media Application Server in a Standalone Configuration

For instructions on installing the Media Application Server standalone system, refer to *Installing a Standalone Configuration*.

Media Application Servers in a High Availability Configuration

High availability, or HA, refers to the availability of resources in a computer system in the wake of planned or unplanned system outages. In release 2.0, application-level clustering was introduced through the use of two nodes, Active and Standby, both of which shared the application load on the Media Application Server.

© 2013 Harmonic Inc. All rights reserved.

In case of an outage, the Standby node becomes the Active one temporarily, until the original node is restored or brought back online. To make the node Active again, you must manually intervene. After the original node is restored, you failback the services to restore high availability.

The following sample diagram (*Figure 2–2*) shows a high availability configuration in which two Media Application Servers are used, providing increased data security and minimal downtime in case of any system failures. The Media Application Servers are connected to both the Spectrum and Harmonic MediaGrid systems as well as two supporting appliances, the JobScaler and the ProxyGenerator. In this configuration, proxy files generated by the ProxyGenerator are stored on the Harmonic MediaGrid system.

The heartbeat consists of a sequence of simple messages that use checksums to ensure normal activity. If the heartbeat is lost between the two nodes, the secondary node acquires the resources from the primary node. The heartbeat monitors two nodes on a secondary Ethernet port using a crossover or a straight-through cable and private IP address network between both hosts.

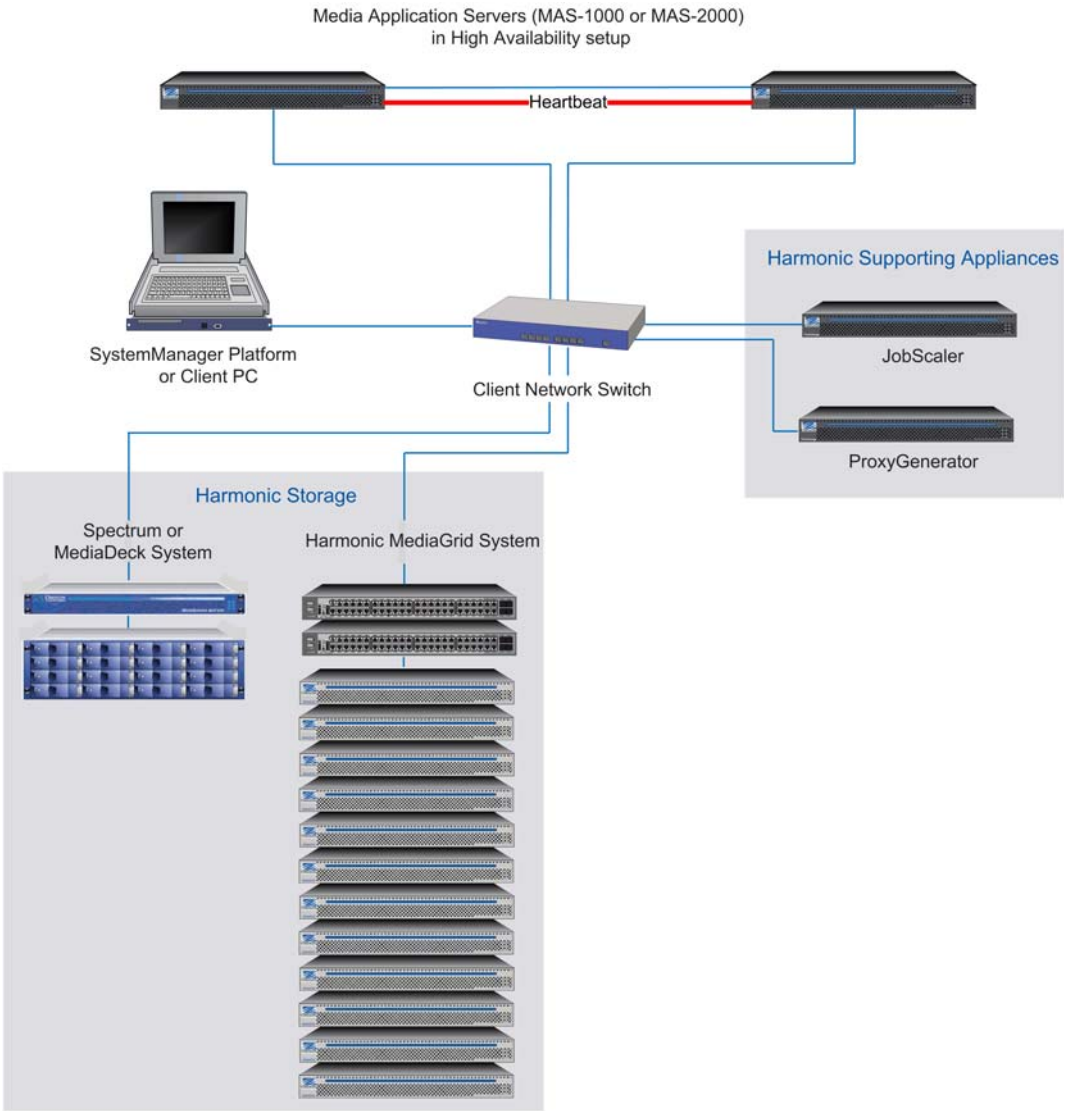

Figure 2–2: Media Application Servers in a High Availability Configuration

© 2013 Harmonic Inc. All rights reserved.

For instructions on installing the high availability configuration, refer to *Installing a High Availability Configuration*.

Media Application Servers in a Cluster Configuration

The following sample diagrams (*Figure 2–3*) shows a cluster configuration in which four Media Application Servers are included:

- Active Database server (DB Node 1)
- Standby Database server (DB Node 2)
- Active Application server (App Node 1)
- Standby Application server (App Node 2)

In a cluster configuration, two database nodes (Active and Standby) and two application nodes (Active and Standby) are deployed to ensure that application and database services are always available.

The Media Application Servers are connected to both the Spectrum and Harmonic MediaGrids, as well as two supporting appliances, the JobScaler and the ProxyGenerator. In this configuration, proxy files generated by the ProxyGenerator are stored on the Harmonic MediaGrid.

The heartbeat consists of a sequence of simple messages that use checksums to ensure normal activity. If the heartbeat is lost between the two nodes, the secondary node acquires the resources from the primary node. The heartbeat monitors two nodes on a secondary Ethernet port using a crossover or a straight-through cable and private IP address network between both hosts.

© 2013 Harmonic Inc. All rights reserved.

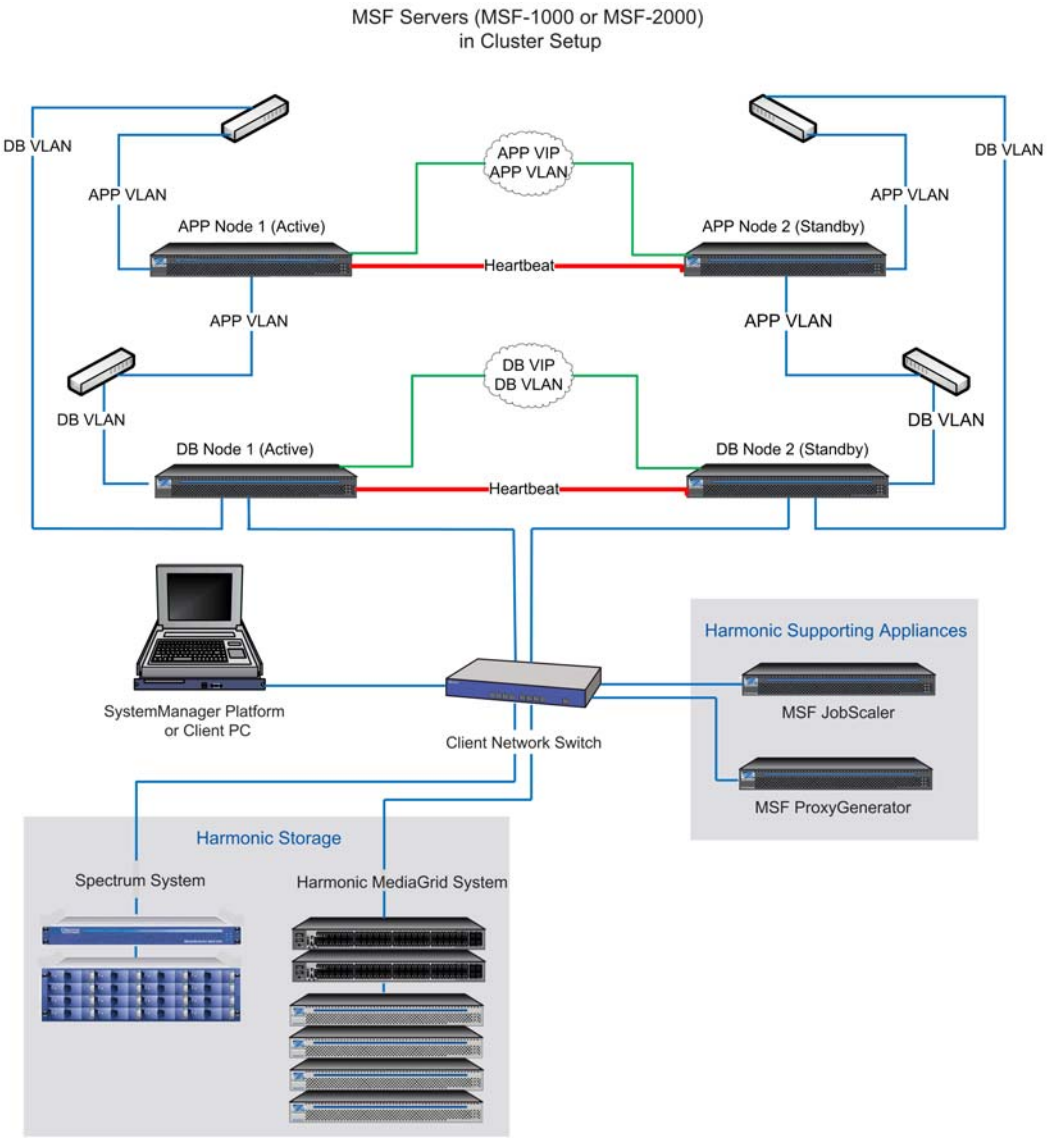

Figure 2–3: Media Application Servers in a Cluster Configuration

For instructions on installing the high availability configuration, refer to *Installing a Cluster Configuration*.

Getting Started

This section explains how to prepare your site, unpack, and rack mount the Media Application Server system.

Preparing the Site

Note the following prerequisites for installation of your Media Application Server:

Environmental

Harmonic equipment is designed to operate in a clean, air-conditioned control room environment. Care must be taken to avoid temperature and humidity extremes.

Power

When connecting equipment, care must be taken to avoid power lines that are subject to noise and voltage spikes. Do not install units on a power circuit that is common to such equipment as air conditioners and refrigeration units. For optimum protection, AC noise filters and surge protectors are recommended if unstable power conditions are present.

Site

Harmonic equipment is designed for rack mounting. Mount the Media Application Server in a manner convenient for your installation environment.

NOTE: A rack mounting kit is provided with each device, which includes the necessary hardware along with detailed mounting instructions. Follow the rack mounting instructions provided with each device.

Cables

Use Gigabit Ethernet compliant wiring such as Cat 5E or better.

Port Labels

Port labels on the server models may differ. Refer to the following table for comparable port labels.

NIC 0	Gb1	eth0
NIC 1	Gb2	eth1
NIC 2	GB3	eth2
NIC 3	GB4	eth3

Unpacking and Inspecting the Media Application Server

When you receive each component, inspect each shipping container for signs of damage. Contact your local Harmonic representative and the carrier immediately if you suspect any damage has occurred during shipping. Check the contents of each box against the packing list to be sure that all parts are included. If any items are missing, contact your local Harmonic representative immediately.

Installing the Media Application Server in a Rack

Install the Media Application Server in cable range of the client network. See the rack mounting instructions provided with the system for complete mounting instructions.

NOTE: A rack mounting kit is provided with the Media Application Server, which includes the necessary hardware along with detailed mounting instructions. Follow the rack mounting instructions provided with each device.

© 2013 Harmonic Inc. All rights reserved.

Installing a Standalone Configuration

This section provides step-by-step instructions for installing the Media Application Server in a standalone configuration. Follow the procedures in the order given.

Connecting the Media Application Server to the Network

This section provides instructions for connecting the Media Application Server to a client network.

NOTE: It is assumed that the Harmonic storage systems (Spectrum, Harmonic MediaGrid, MediaDeck) are already connected to the client network and to an SystemManager.

NOTE: NTP for Windows may already be installed on the SystemManager platform and does not need to be installed on the Media Application Server. NTP for Windows ensures a common time reference across components in a Harmonic system. MAS synchronizes its time with SystemManager.

Refer to *Figure 2–4* when completing these instructions.

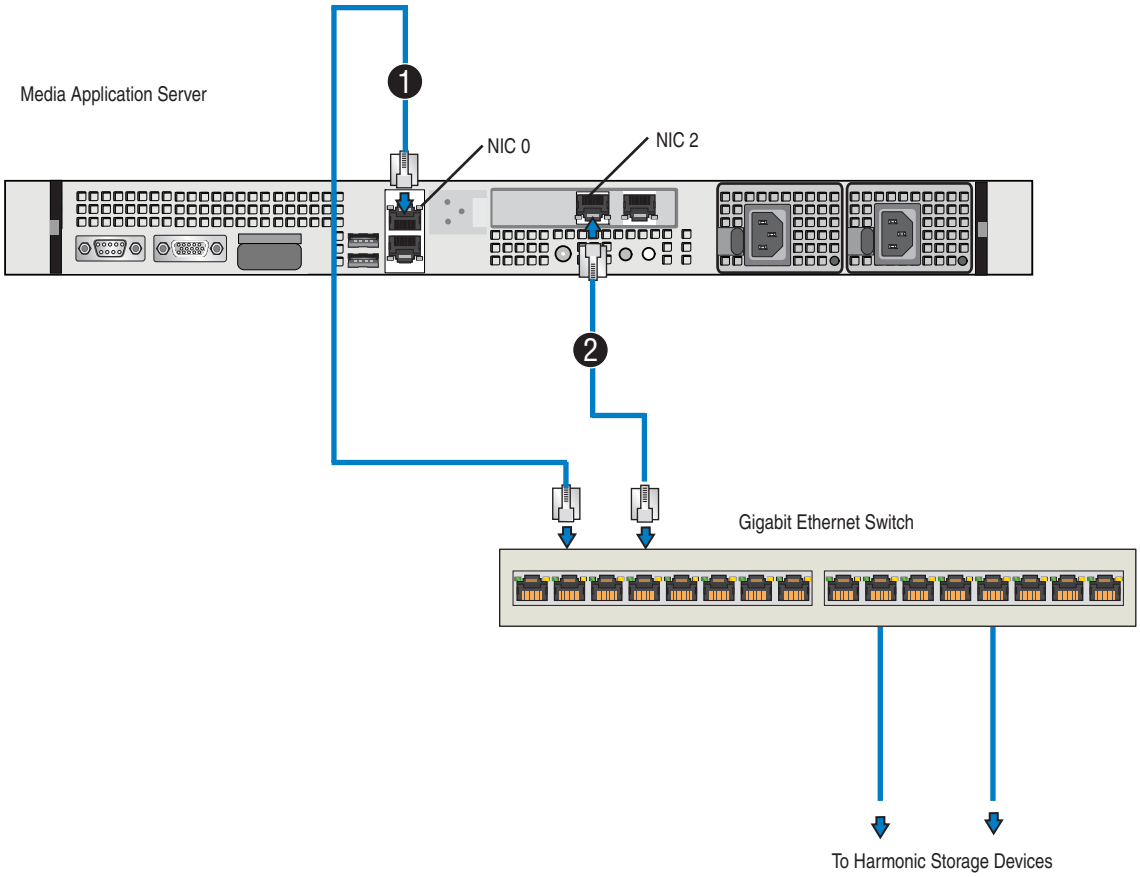

Figure 2–4: Media Application Server Standalone Configuration and Network Connections

1. Connect an Ethernet cable to NIC 0 on the back of the Media Application Server. Connect the other end of the cable to an available port on the client switch. Connect the cables to the same subnet as the SystemManager platform.

© 2013 Harmonic Inc. All rights reserved.

2. Connect an Ethernet cable to NIC 2 on the back of the Media Application Server. Connect the other end of the cable to an available port on the client switch, within the same subnet as port 1.
3. The system has two power supplies. To take full advantage of its dual redundant power supplies, ensure that separate, isolated power sources are available. Connect the power cords to the system's two power connectors.

Powering up and Configuring the Media Application Server

1. Power on the Media Application Server by pressing the **power button** on the front panel.
2. Attach a monitor, keyboard, and mouse to the Media Application Server rear panel.

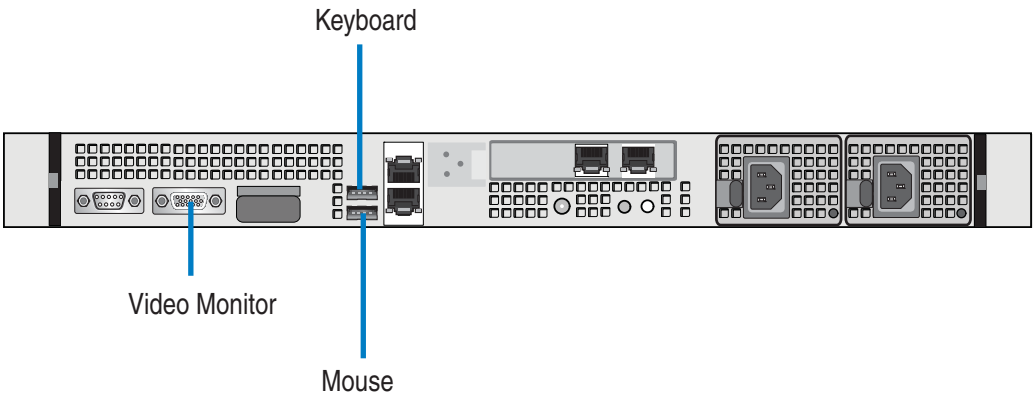

Figure 2–5: Monitor, Keyboard, and Mouse Attachments

Once the appliance is powered up, as soon as you attach a monitor, the Login window displays.

Figure 2–6: Fedora Login

3. Log in to the Fedora interface with the following user name and password:

   User name: `ovnuser`

   Password: `OVN@SvCaUsa`
4. From the Fedora UI, open a Terminal session by clicking **Applications** > **System Tools** > **Terminal** (see *Figure 2–7*).

IMPORTANT: Once you have logged on to the server, each command that requires root permission must be preceded by the "sudo" command. (The entries requiring the command are identified in the following steps.) Once the password is entered, you may complete "sudo" commands without a password for five minutes.

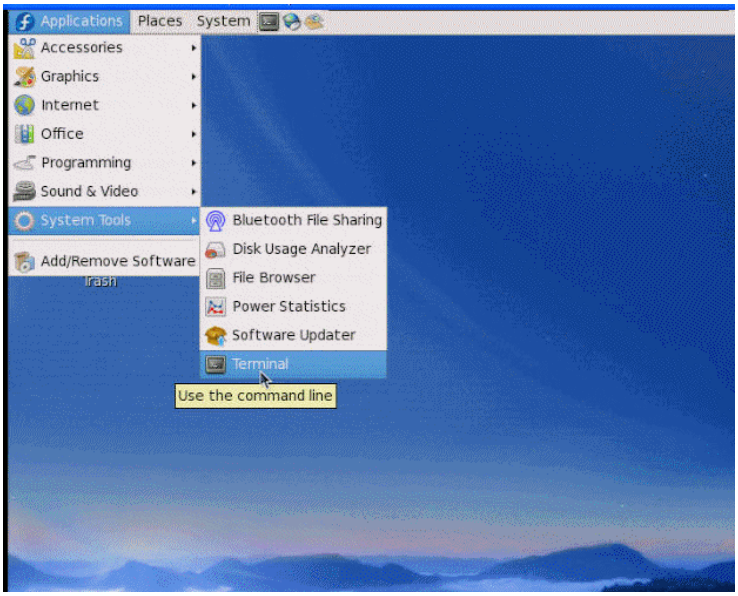

Figure 2–7: Open Terminal Session

5. Initiate the configuration script by typing:
   `sudo /opt/msf/bin/MAS_cfg`

   When prompted, enter the network settings for the Media Application Server network.

   The configuration script asks a series of questions requiring information specific to your site. To complete the configuration script, you need to supply the information shown in *Table 2–1*. The **Value** column is left empty in case you want to print this table and use it for your system settings.

Table 2–1: Media Application Server Standalone Configuration

Property	Description	Value
MAS Public Subnet	The Media Application Server public subnet. The first three octets are used.	
Gateway IP address	IP address of the default Gateway to be used.	
Netmask IP address	The IP address for the Netmask of the Media Application Server network.	
Standalone IP address	IP address of the Media Application Server standalone system.	
Host Name for Standalone System	This is the host name for the Media Application Server standalone system.	

© 2013 Harmonic Inc. All rights reserved.

Table 2–1: Media Application Server Standalone Configuration

Property	Description	Value
Domain Name	This is the Media Application Server domain name.	
IP address of the Primary DNS Server	This is the IP address of the primary DNS server.	
IP address of the Secondary DNS Server	This is the IP address of the secondary DNS server.	
IP address of the NTP Server	This is the IP address of the NTP server.	
Time Zone	If you are unsure of the correct time zone string, run `/opt/msf/bin/omtzselect` to determine the text string. For more information about setting the time zone, refer to *Setting the Media Application Server Time Zone*.	

6. When prompted, verify your network settings and then type **Yes** to accept the settings or **No** to edit the settings.
7. Once you have verified your network settings, the script asks if you want to apply the settings. If the settings are correct, type **Yes** to apply the settings.

   The server automatically reboots.

   If you do not want to apply the network settings at this time, type **No**. You can apply the settings at another time by running the following command:

   ```
   sudo /opt/msf/bin/applyconfig.sh
   ```

   When prompted, provide the `ovnuser` password.

NOTE: The configuration files can be recovered from the following directory: /opt/msf/bin/config.

8. Once the server has rebooted, check the status of the server from a Fedora Terminal session by typing the following command:

   ```
   sudo msf status
   ```

9. When prompted for a password, type the `ovnuser` password.

   Table 2–2 shows a brief description of the Media Application Server services.

Table 2–2: Media Application Server Services

Service	Description
msf-app-server	Application server.
msf-bbb	Bulletin board service, required for Grid Service.
msf-callback-watcher	Runs the process called omdam that handles the callback notification from Harmonic MediaGrid.
msf-db	Database server.

© 2013 Harmonic Inc. All rights reserved.

Table 2–2: Media Application Server Services

Service	Description
msf-frontpanel	Updates the front bezel of the Media Application Server.
msf-grid	Grid service that establishes the grid on a Harmonic MediaGrid cluster.
msf-omserver	For SystemManager use.
msf-rpc	Runs the process called omdam that talks to the player/media APIs.
omwatchdog	A watchdog that restarts services that stopped or quit unexpectedly.

For a Standalone server, the status will show:

```
sudo msf status
watchdogd (pid 30828) is running...
ha not configured
msf-rpc-server is running (21611).
msf-callback-watcher is running (21683).
mysqld (pid 30166) is running...
Omneon Media Services Framework App Server is running (30311).
omserver (pid 30522) is running...
Omneon Media Services Framework FrontPanel is not running.
rinda_ring.rb (pid 30597) is running;   rinda_ts.rb (pid 30695) is
running...
gridMgr.rb (pid 25867) is running...
```

NOTE: If the Media Application Server status shows that services are not running, contact Technical Support for assistance (see *Contacting the Technical Assistance Center*).

This completes the hardware installation of the Media Application Server. Refer to the *System Set Up and Configuration* to continue setting up your Media Application Server.

Installing a High Availability Configuration

This section provides step-by-step instructions for installing the Media Application Server in a HA configuration. Follow the procedures in the order given.

Connecting the Media Application Servers to the Network

This section provides instructions for connecting the Media Application Servers to a client network.

NOTE: It is assumed that the Harmonic storage systems (Spectrum, Harmonic MediaGrid, MediaDeck) are already connected to the client network and to an SystemManager.

NOTE: NTP for Windows is factory-installed on the SystemManager platform and does not need to be installed on the Media Application Server system. NTP for Windows ensures a common time reference across components in a Harmonic system. The Media Application Server synchronizes its time with SystemManager.

Refer to *Figure 2–8* when completing these instructions.

© 2013 Harmonic Inc. All rights reserved.

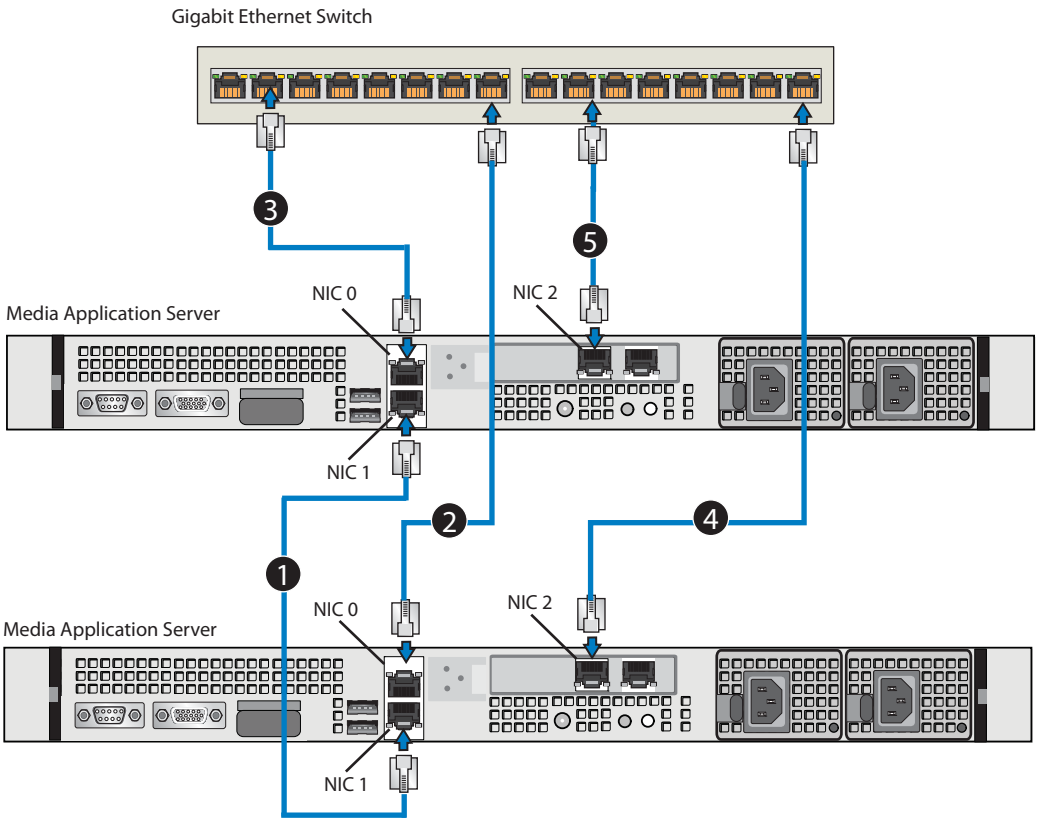

Figure 2–8: Media Application Servers High Availability Configuration and Network Connections

IMPORTANT: Both of the Media Application Servers in a high availability configuration must be the same model; mixed configurations are not supported.

1. Connect an Ethernet cable from NIC 1 (on the rear panel of one Media Application Server to NIC 1 on the second Media Application Server.
2. From the first Media Application Server, attach an Ethernet cable to NIC 0, and attach the other end of the cable to an available port on the client switch.
3. From the second Media Application Server, attach an Ethernet cable to NIC 0, and attach the other end of the cable to an available port on the client switch.
4. From the first Media Application Server, attach an Ethernet cable to NIC 2, and attach the other end of the cable to an available port on the client switch.
5. From the second Media Application Server, attach an Ethernet cable to NIC 2, and attach the other end of the cable to an available port on the client switch.

IMPORTANT: Both Media Application Servers must be connected on the same subnet.

6. Each Media Application Server has two power supplies. To take full advantage of the dual redundant power supplies, connect each power supply to it's own separate power source.

© 2013 Harmonic Inc. All rights reserved.

Powering Up and Configuring the Media Application Servers

In an HA system, one appliance is pre-configured to be the Active server (or Node 1) and the other appliance is pre-configured to be the Standby server (or Node 2). Make sure you have identified which appliance is the Active server and which appliance is the Standby server before powering up the system.

Configuring the Active Server (Node 1)

1. Determine which of the two servers is the Active server (Node 1), then apply power to the Active server by pressing the **power button** on the front panel. Do not apply power to the Standby (Node 2) server at this point.
2. Attach a monitor, keyboard, and mouse to the Media Application Server rear panel. (See *Figure 2–5*.)

   Once the appliance is powered up, as soon as you attach a monitor, the Login window displays. (See *Figure 2–6*.)
3. Log in to the Fedora interface with the following user name and password:

   User name: `ovnuser`

   Password: `OVN@SvCaUsa`
4. From the Fedora UI, open a Terminal session by clicking **Applications** > **System Tools** > **Terminal** (*Figure 2–7*).

IMPORTANT: Once you have logged on to the server, each command that requires root permission must be preceded by the "sudo" command. (The entries requiring the command are identified in the following steps.) Once the password is entered, you may complete "sudo" commands without a password for five minutes.

5. Initiate the configuration script by typing:
   `sudo /opt/msf/bin/MAS_cfg`

   When prompted, enter the network settings for the Media Application Server HA system.

   The configuration script asks a series of questions requiring information specific to your site. To complete the configuration script, you need to supply the information shown in *Table 2–3*. The **Value** column is left empty in case you want to print this table and use it for your system settings.

Table 2–3: Media Application Servers High Availability Configuration

Property	Description	Value
MAS Public Subnet	The Media Application Server public subnet. The first three octets are used.	
Gateway IP address	This is the IP address of the default Gateway to be used.	
Netmask IP address	The IP address for the Netmask of the Media Application Server network.	
Node 1 IP address	This is the IP address of the Node 1 Media Application Server.	
Node 2 IP address	This is the IP address of the Node 2 Media Application Server.	

© 2013 Harmonic Inc. All rights reserved.

Table 2–3: Media Application Servers High Availability Configuration

Property	Description	Value
Virtual IP address of the HA system	This IP address is used by the Active and Standby servers (Node 1 and Node 2) if one of the servers is unresponsive. Choose an IP address that will not conflict with other devices on the client network.	
Multicast group IP address of HA System	Multicast group IP address used by heartbeat service	239.<3 octets of the Virtual IP address>
Host Name for Node 1	This is the host name for Media Application Server Node 1.	
Host Name for Node 2	This is the host name for Media Application Server Node 2.	
Domain Name	This is the Media Application Server domain name.	
IP address of the Primary DNS Server	This is the IP address of the primary DNS server.	
IP address of the Secondary DNS Server	This is the IP address of the secondary DNS server.	
IP address of the NTP Server	This is the IP address of the NTP server.	
Time Zone	If you are unsure of the correct time zone string, run `/opt/msf/bin/omtzselect` to determine the text string. For more information about setting the time zone, refer to *Setting the Media Application Server Time Zone*.	

6. When prompted, verify your network settings and then type **Yes** to accept the settings or **No** to edit the settings.
7. Once you have verified your network settings, the script asks if you want to apply the settings. If the settings are correct, type **Yes** to apply the settings.

   The server automatically reboots.

   If you do not want to apply the network settings at this time, type **No**. You can apply the settings at another time by running the following command:

   ```
   sudo /opt/msf/bin/applyconfig.sh
   ```

   When prompted, provide the `ovnuser` password.

NOTE: The configuration files can be recovered from the following directory: /opt/msf/bin/config.

8. Once the server has rebooted, check the status of the server from a Fedora Terminal session by typing the following command:

   ```
   sudo msf status
   ```

9. When prompted for a password, type the `ovnuser` password.

Table 2–4 shows a brief description of the Media Application Server services.

Table 2–4: Media Application Server Services

Service	Description
msf-app-server	Application server.
msf-bbb	Bulletin board service, required for Grid Service.
msf-callback-watcher	Runs the process called omdam that handles the callback notification from Harmonic MediaGrid.
msf-db	Database server (if Node is Active).
msf-frontpanel	Updates the front bezel of the Media Application Server.
msf-grid	Grid service that establishes the grid on a Harmonic MediaGrid cluster.
msf-ha	Controls the heartbeat.
msf-omserver	For SystemManager use.
msf-rpc	Runs the process called omdam that talks to the player/media APIs.
omwatchdog	A watchdog that restarts services that stopped or quit unexpectedly.

If the system is Active, it will return the following:

```
[root@msfsvr_199_70 localbrowse]# sudo msf status
watchdogd (pid 3295) is running...
fullNode, ha configured, active
msf-rpc-server is running (1830).
msf-callback-watcher is running (2032).
mysqld (pid 2572) is running...
Omneon Media Services Framework App Server is running (2918).
omserver (pid 3167) is running...
Omneon Media Services Framework FrontPanel is not running.
rinda_ring.rb (pid 2068) is running;   rinda_ts.rb (pid 2212) is
running...
gridMgr.rb (pid 2315
3220) is running...
```

NOTE: If the Media Application Server status shows that services are not running or if the system is not Active, contact Technical Support for assistance (see *Contacting the Technical Assistance Center*).

10. Once you see that the Active server is up and running with Media Application Server services, begin the power up process for the Standby server.
11. To see the DB replication status between two nodes, run the following command:
    `sudo displayDbRepStatus.sh`

Configuring the Standby Server (Node 2)

1. Apply power to the Standby server by pressing the **power button** on the front panel.
2. Connect a monitor, keyboard, and mouse to the Media Application Server rear panel.

© 2013 Harmonic Inc. All rights reserved.

3. Log in to the Fedora UI and open a Terminal session by clicking **Applications** > **System Tools** > **Terminal**. Log in with the following user name and password:

   User name: `ovnuser`

   Password: `OVN@SvCaUsa`

4. To apply the configuration, run the following command:
   ```
   sudo /opt/msf/bin/applyconfig.sh <Public or private IP address of the Node where
   MAS_cfg was executed>
   ```
   The public and private IP address of a node in HA can be retrieved from:
   ```
   sudo getip
   ```
   Which will return a list of IP address related to that node where the first is the public IP and the second is the private IP address.

NOTE: In some users' environment where the new standby node is not known to its network, then using private IP address is a good choice.

When prompted, provide the `ovnuser` password.

This command applies the configuration settings from the Active server to the Standby server.

The server automatically reboots.

NOTE: The configuration files can be recovered from the following directory: /opt/msf/bin/config.

5. Once the server has rebooted, verify that all Media Application Server services are running. From the `$` prompt, type the following command:
   ```
   sudo msf status
   ```
   When prompted for a password, type the `ovnuser` password.

   A summary of the services appears. Refer to *Table 2–4* for a brief description of the Media Application Server services.

   Now, services are running on both nodes.

NOTE: If the Media Application Server status shows that services are not running, contact Technical Support for assistance (see *Contacting the Technical Assistance Center*).

6. To see the configuration of the node, type the following command:
   ```
   /opt/msf/bin/getNodeStatus.sh
   ```
   If the server is Standby, it will return the following:
   ```
   ha configured, standby
   ```
7. To see the DB replication status between two nodes, run the following command:
   ```
   sudo displayDbRepStatus.sh
   ```
8. When both nodes are up after a successful installation, run the following command:
   ```
   addPeer.sh
   ```
   This completes the hardware installation of the Media Application Server HA system. Refer to the *System Set Up and Configuration* to continue setting up your Media Application Server.

© 2013 Harmonic Inc. All rights reserved.

Installing a Cluster Configuration

This section provides step-by-step instructions for installing the Media Application Server system. Follow the procedures in the order given.

Connecting the Media Application Servers to the Network

In a cluster setup, two application servers and two database servers are interconnected and used as Active and Standby systems for redundancy purposes. This section provides instructions for installing a Media Application Server cluster system.

NOTE: It is assumed that the Harmonic storage systems (Spectrum, Harmonic MediaGrid, MediaDeck) are already connected to the client network and to an SystemManager.

IMPORTANT: NTP for Windows may already be installed on the SystemManager platform and does not need to be installed on the Media Application Server system. NTP for Windows ensures a common time reference across components in a Harmonic system. The Media Application Server system synchronizes its time with SystemManager. Ensure that the SystemManager time is synchronized to an NTP server.

Refer to *Figure 2–9* when completing these instructions.

© 2013 Harmonic Inc. All rights reserved.

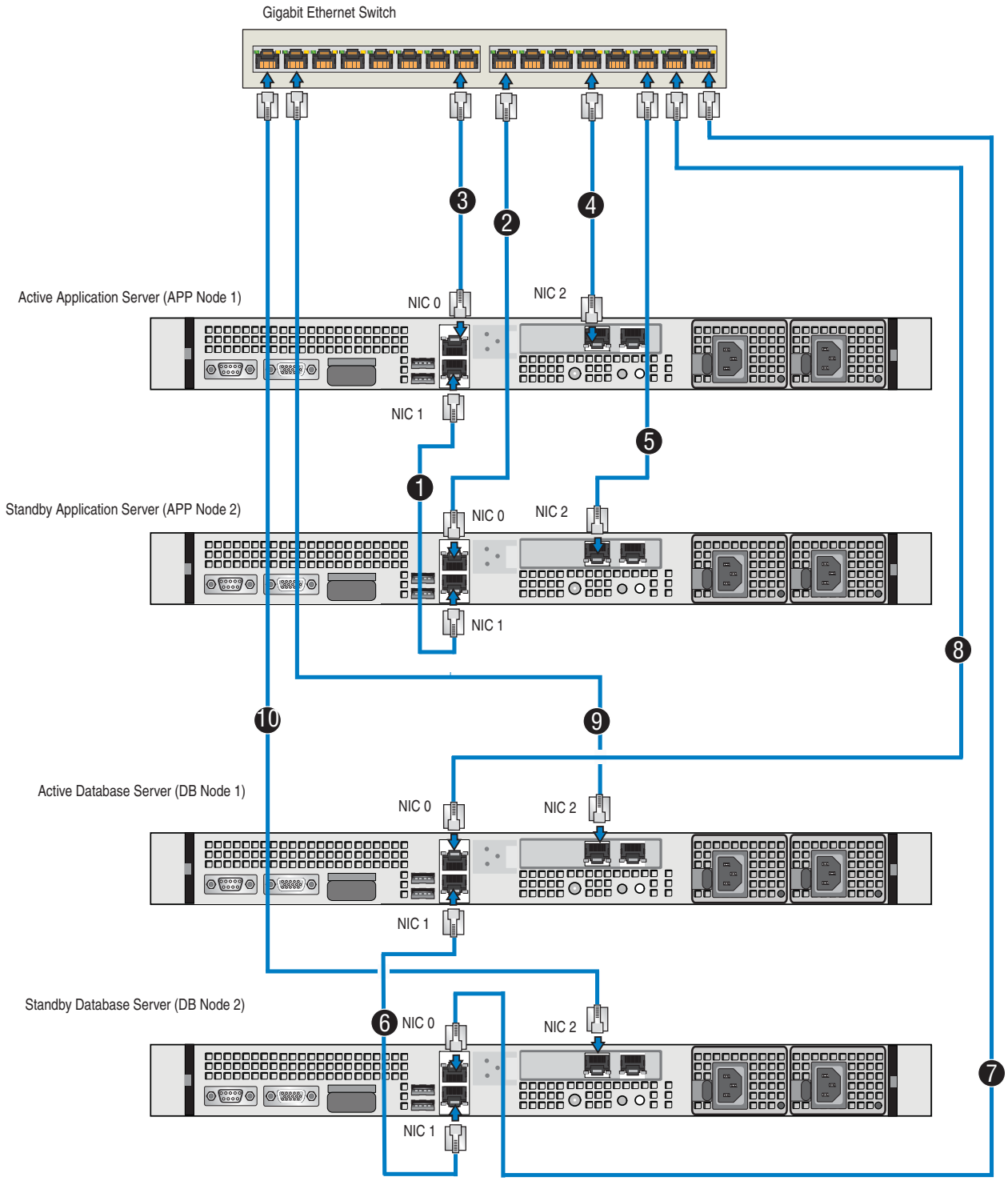

Figure 2–9: Media Application Server Cluster Configuration and Network Connections

IMPORTANT: All of the Media Application Servers in a cluster configuration must be the same model; mixed configurations are not supported.

© 2013 Harmonic Inc. All rights reserved.

IMPORTANT: All Media Application Servers must be connected on the same subnet.

1. Connect an Ethernet cable from NIC 1 on the rear panel of the Standby Application server (App Node 2) to NIC 1 on the Active Application server (App Node 1).
2. From the Standby Application server (App Node 2) attach an Ethernet cable to NIC 0, and attach the other end of the cable to an available port on the client switch.
3. From the Active Application server (App Node 1), attach an Ethernet cable to NIC 0 and attach the other end of the cable to an available port on the client switch.
4. From the Active Application server (App Node 1), attach an Ethernet cable to NIC 2 and attach the other end of the cable to an available port on the client switch.
5. From the Standby Application server (App Node 2) attach an Ethernet cable to NIC 2 and attach the other end of the cable to an available port on the client switch.
6. Connect an Ethernet cable from NIC 1 on the rear panel of the Standby Database server to NIC 1 on the Active Database server.
7. From the Standby Database server (DB Node 2) attach an Ethernet cable to NIC 0, and attach the other end of the cable to an available port on the client switch.
8. From the Active Database server (DB Node 1), attach an Ethernet cable to NIC 0 and attach the other end of the cable to an available port on the client switch.
9. From the Active Database server (DB Node 1), attach an Ethernet cable to NIC 2 and attach the other end of the cable to an available port on the client switch.
10. From the Standby Database server (DB Node 2) attach an Ethernet cable to NIC 2 and attach the other end of the cable to an available port on the client switch.
11. Each Media Application Server has two power supplies. To take full advantage of the dual redundant power supplies, connect each power supply to it's own separate power source.

Powering Up and Configuring the Media Application Servers

An Media Application Server cluster system has four servers:

- Active Database server (DB Node 1)
- Standby Database server (DB Node 2)
- Active Application server (App Node 1)
- Standby Application server (App Node 2)

Make sure you have identified which appliances function as Active servers and which appliances function as Standby servers before powering up the system.

Configuring the Active Database Server (DB Node 1)

1. Apply power to the Active Database server (DB Node 1) by pressing the **power button** on the front panel. Do not apply power to the Standby Database server (DB Node 2) server at this point.
2. Attach a monitor, keyboard, and mouse to the Media Application Server rear panel. (See *Figure 2–5*.)

   After the appliance is powered up, as soon as you attach a monitor, the Login window displays. (See *Figure 2–6*.)
3. Log in to the Fedora interface with the following user name and password:

   User name: `ovnuser`

   Password: `OVN@SvCaUsa`

© 2013 Harmonic Inc. All rights reserved.

4. From the Fedora UI, open a Terminal session by clicking **Applications** > **System Tools** > **Terminal** (See *Figure 2–7.*)).

IMPORTANT: Once you have logged on to the server, each command that requires root permission must be preceded by the "sudo" command. (The entries requiring the command are identified in the following steps.) Once the password is entered, you may complete "sudo" commands without a password for five minutes.

5. Initiate the configuration script by typing:
   `sudo /opt/msf/bin/MAS_cfg`

   When prompted, enter the network settings for the Media Application Server cluster system.

   The configuration script asks a series of questions requiring information specific to your site. To complete the configuration script, you need to supply the information shown in *Table 2–5*. The **Value** column is left empty in case you want to print this table and use it for your system settings.

Table 2–5: Media Application Server Cluster Configuration

Property	Description	Value
MAS Public Subnet	The MAS public subnet. The first three octets are used.	
Gateway IP address	This is the IP address of the default Gateway to be used.	
Netmask IP address	The IP address for the Netmask of the Media Application Server network.	
App Node 1 IP address	This is the IP address of the Application (App) Node 1 Media Application Server.	
App Node 2 IP address	This is the IP address of the App Node 2 Media Application Server.	
Virtual IP address of the App servers	This IP address is used by the Active and Standby App servers (Node 1 and Node 2) if one of the servers is unresponsive. Choose an IP address that will not conflict with other devices on the client network.	
Multicast group IP address of HA System	This IP address is used by heartbeat service between the App Node 1 and App Node 2.	239.< 3 octets of Virtual IP address of the App servers>
DB Node 1 IP address	This is the IP address of the Database (DB) Node 1 Media Application Server.	
DB Node 2 IP address	This is the IP address of the DB Node 2 Media Application Server.	
Virtual IP address of the DB servers	This IP address is used by the Active and Standby DB servers (Node 1 and Node 2) if one of the servers is unresponsive. Choose an IP address that will not conflict with other devices on the client.	

© 2013 Harmonic Inc. All rights reserved.

Table 2–5: Media Application Server Cluster Configuration

Property	Description	Value
Multicast group IP address of DB Servers	This IP address is used by heartbeat service between the DB Node 1 and DB Node 2.	239.< 3 octets of Virtual IP address of the DB servers>
Host Name for App Server Node 1	This is the host name for App server Node 1.	
Host Name for App Server Node 2	This is the host name for App server Node 2.	
Host Name for DB Server Node 1	This is the host name for DB server Node 1.	
Host Name for DB Server Node 2	This is the host name for DB server Node 2.	
Domain Name	This is the Media Application Server domain name.	
IP address of the Primary DNS Server	This is the IP address of the primary DNS server.	
IP address of the Secondary DNS Server	This is the IP address of the secondary DNS server.	
IP address of the NTP Server	This is the IP address of the NTP server.	
Time Zone	If you are unsure of the correct time zone string, run `/opt/msf/bin/omtzselect` to determine the text string. For more information about setting the time zone, refer to *Setting the Media Application Server Time Zone*.	

6. When prompted, verify your network settings and then type **Yes** to accept the settings or **No** to edit the settings.

   The server automatically reboots.

   If you do not want to apply the network settings at this time, type **No**.

IMPORTANT: You can apply the settings at another time by running the following command: sudo /opt/msf/bin/applyconfig <Public IP address of the node where MAS_cfg was executed>. However, you must apply this command on DB Node 1 first, before applying it on any other server.

   Where requested, provide the `ovnuser` password.

NOTE: The configuration files can be recovered from the following directory: /opt/msf/bin/config.

7. Once the server has rebooted, check the status of the server from a Fedora Terminal session by typing the following command:

   ```
   sudo msf status
   ```

© 2013 Harmonic Inc. All rights reserved.

The following service status appears:

```
[root@msfdbNode_212_13 ~]# sudo msf status
watchdogd (pid 29412) is running...
dbNode, ha configured, active
mysqld (pid 29034) is running...
omserver (pid 29297) is running...
Omneon Media Services Framework FrontPanel is not running.
```

8. When prompted for a password, type the `ovnuser` password.

   A summary of the services appears. *Table 2–6* shows a brief description of the Media Application Server services.

Table 2–6: Media Application Server Services

Service	Description
DB Node	
msf-ha	Controls the heartbeat.
msf-db	Database server (if Node is Active).
msf-omserver	For SystemManager use.
omwatchdog	A watchdog that restarts services that stopped or quit unexpectedly.
mysqld	MySQL database service.

9. Verify that the Active Database server is configured for Active by typing the following command:

   ```
   getNodeStatus.sh
   ```

   It will return the following if the server is Active:

   ```
   dbNode, ha configured, active
   ```

NOTE: If the Media Application Server status shows that services are not running or if the system is not Active, contact Technical Support for assistance (see *Contacting the Technical Assistance Center*).

10. Once you see that the Active server is up and running with Media Application Server services, begin the power up process for the Standby Database server.

Configuring the Standby Database Server (DB Node 2)

1. Apply power to the Standby Database server (DB Node 2) by pressing the **power button** on the front panel.
2. Connect a monitor, keyboard, and mouse to the Standby Database server rear panel.
3. Once the Standby Database server is powered up, log in to the Fedora UI and open a Terminal session by clicking **Applications** > **System Tools** > **Terminal**. Log in with the following user name and password:

   User name: `ovnuser`

   Password: `OVN@SvCaUsa`

IMPORTANT: As soon as the software installation is done on DB Node 2, the sync process begins between DB Node 1 and DB Node.

© 2013 Harmonic Inc. All rights reserved.

4. Run the following command:
   `sudo /opt/msf/bin/applyconfig.sh.<DB Node 1 IP address>`

   Use either the public or private IP address of DB Node 1.

   When prompted, provide the `ovnuser` password.

   This command applies the configuration settings from the Active Database server to the Standby Database server.

   The server automatically reboots.

NOTE: The configuration files can be recovered from the following directory: /opt/msf/bin/config.

5. Once the server has rebooted, check the status of the server from a Fedora Terminal session by typing the following command:
   `sudo msf status`

   The following service status appears:

```
[ovnuser@msfdbNode_212_14 ~]$ sudo msf status
watchdogd (pid 3712) is running...
dbNode, ha configured, standby
mysqld (pid 3331) is running...
omserver (pid 3596) is running...
Omneon Media Services Framework FrontPanel is not running.
```

6. When prompted for a password, type the `ovnuser` password.

   A summary of the services appears. Refer to *Table 2–6* for a brief description of the Media Application Server services.

NOTE: If the Media Application Server status shows that services are not running, contact Technical Support for assistance (see *Contacting the Technical Assistance Center*).

7. Verify that the Standby Database server is configured for Standby by typing the following command:
   `getNodeStatus.sh`

   It will return the following if the server is Standby:

   `dbNode, ha configured, standby`

8. Once you see that the Standby Database server is up and running with Media Application Server services, begin the power up process for the Active Application server.
9. To see the DB replication status between two nodes, run the following command:
   `sudo displayDbRepStatus.sh`

Configuring the Active Application Server (App Node 1)

1. Apply power to the Active Application server (App Node 1) by pressing the **power button** on the front panel.
2. Connect a monitor, keyboard, and mouse to the Active Application server rear panel.
3. Once the Active Application server is powered up, log in to the Fedora UI and open a Terminal session by clicking **Applications** > **System Tools** > **Terminal**. Log in with the following user name and password:

   User name: `ovnuser`

   Password: `OVN@SvCaUsa`

© 2013 Harmonic Inc. All rights reserved.

4. Run the following command:
   `sudo /opt/msf/bin/applyconfig.sh.<DB Node 1 IP address>`

   When prompted, provide the `ovnuser` password.

   This command applies the configuration settings from the Active Database server to the Active Application server.

   The server automatically reboots.

NOTE: The configuration files can be recovered from the following directory: /opt/msf/bin/config.

5. Once the server has rebooted, verify that all server services are running. From the `$` prompt, type the following command:
   `sudo msf status`

   The following service status appears:

```
watchdogd (pid 7864) is running...
appNode, ha configured, active
msf-rpc-server is running (15307).
msf-callback-watcher is running (7065).
memcached is running (7254).
Omneon Media Services Framework App Server is running (7319).
omserver (pid 7515) is running...
Omneon Media Services Framework FrontPanel is not running.
rinda_ring.rb (pid 7606) is running;   rinda_ts.rb (pid 7721) is
running...
gridMgr.rb (pid 27011) is running...
```

   When prompted for a password, type the `ovnuser` password.

   A summary of the services appears. Refer to *Table 2–6* for a brief description of the Media Application Server services.

NOTE: If the Media Application Server status shows that services are not running, contact Technical Support for assistance (see *Contacting the Technical Assistance Center*).

6. Verify that the Active Application server is configured by typing the following command:
   `getNodeStatus.sh`

   It will return the following if the server is Active:

   `appNode, ha configured, active`

7. Once you see that the Active Application server is up and running with Media Application Server services, begin the power up process for the Standby Application server.

Configuring the Standby Application Server (App Node 2)

1. Apply power to the Standby Application server (App Node 2) by pressing the **power button** on the front panel.
2. Connect a monitor, keyboard, and mouse to the Active Application server rear panel.
3. Once the Standby Application server is powered up, log in to the Fedora UI and open a Terminal session by clicking **Applications** > **System Tools** > **Terminal**. Log in with the following user name and password:

   User name: `ovnuser`

   Password: `OVN@SvCaUsa`

© 2013 Harmonic Inc. All rights reserved.

4. Run the following command:
   ```
   sudo /opt/msf/bin/applyconfig.sh.<DB Node 1 IP address>
   ```
   When prompted, provide the `ovnuser` password.

   This command applies the configuration settings from the Active Database server to the Standby Application server.

   The server automatically reboots.

NOTE: The configuration files can be recovered from the following directory: /opt/msf/bin/config.

5. Once the server has rebooted, verify that all server services are running. From the `$` prompt, type the following command:
   ```
   sudo msf status
   ```
   The following service status appears:
   ```
   watchdogd (pid 1823) is running...
   appNode, ha configured, standby
   msf-rpc-server is running (1010).
   msf-callback-watcher is running (1070).
   memcached is running (1263).
   Omneon Media Services Framework App Server is running (1473).
   omserver (pid 1665) is running...
   Omneon Media Services Framework FrontPanel is not running.
   rinda_ring.rb is stopped;  rinda_ts.rb is stopped
   gridMgr.rb is stopped
   ```
   When prompted for a password, type the `ovnuser` password.

   A summary of the services appears. Refer to *Table 2–6* for a brief description of the Media Application Server services.

NOTE: If the Media Application Server status shows that services are not running, contact Technical Support for assistance (see *Contacting the Technical Assistance Center*).

6. Verify that the Standby Application server is configured for Standby by typing the following command:
   ```
   getNodeStatus.sh
   ```
   It will return the following if the server is Standby
   ```
   appNode, ha configured, standby
   ```
7. For each App Node, run the following command:
   ```
   addPeer.sh
   ```

This completes the hardware installation of the Media Application Server cluster system. Refer to the *System Set Up and Configuration* to continue setting up your Media Application Server.

Installing a ProxyGenerator

The ProxyGenerator allows you to generate proxies of your video content, which you can then view and manipulate. The following instructions describe how to connect a ProxyGenerator to your Media Application Server.

© 2013 Harmonic Inc. All rights reserved.

NOTE: If you are installing a ProxyGenerator and do not have a DHCP server on your network, Harmonic *recommends that you install vDHCP so* IP addresses can be automatically configured on your network. Refer to the *Harmonic SystemManager Installation Guide* for more information.

Refer to *Figure 2–10* when completing these instructions.

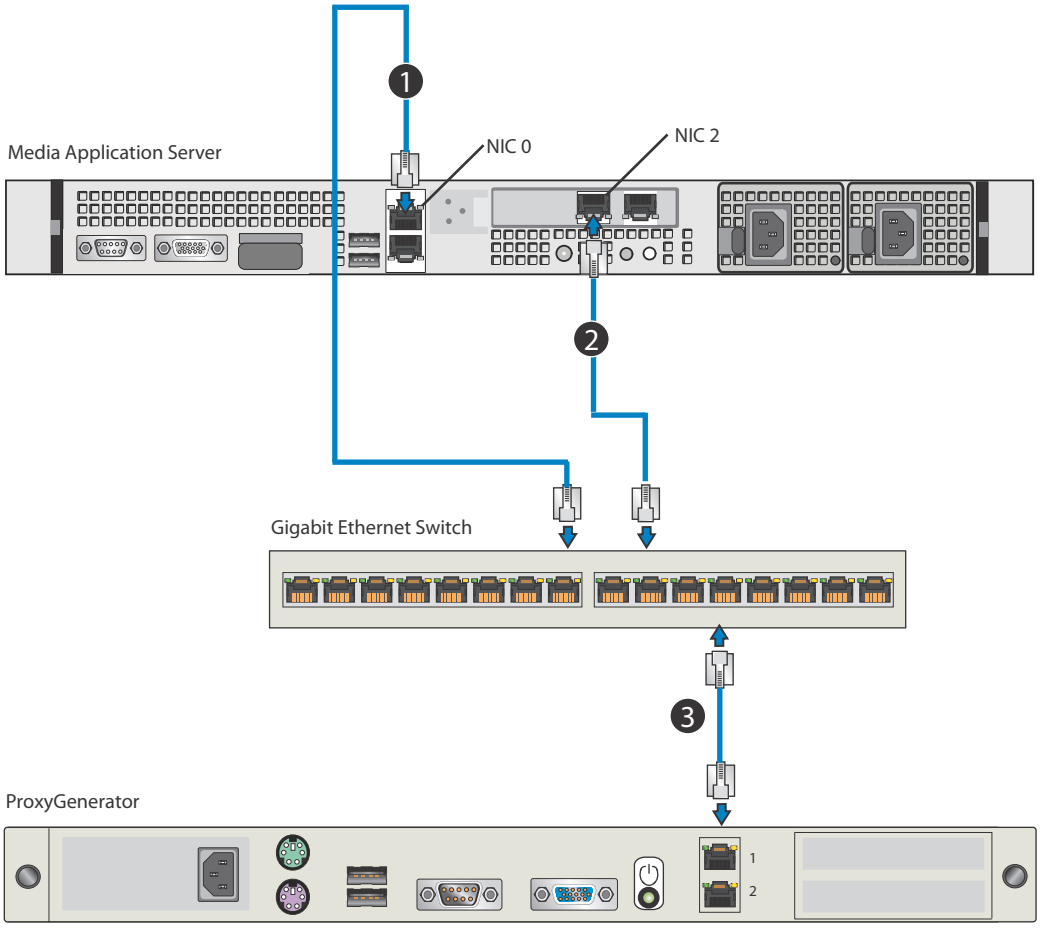

Figure 2–10: ProxyGenerator and Network Connections

1. Follow the instructions in *Installing a Standalone Configuration* to connect and power up your Media Application Server.
2. Connect an Ethernet cable to NIC 0 on the back of the ProxyGenerator, and then connect the other end of the cable to an available port on the client switch.
3. Connect the power cord to the ProxyGenerator and attach it to a power source.
4. Apply power to the ProxyGenerator and allow it to boot up. Check the ProxyGenerator power on indicator lights and ensure that there are no problems. Refer to *ProxyGenerator* for a description of the indicator lights.

To begin using the Browse service, refer to Using the Browse Service in the *Media Application Server Installation and Configuration Guide*.

© 2013 Harmonic Inc. All rights reserved.

Installing a JobScaler

The JobScaler allows you to transcode media on your Media Application Server. The following instructions describe how to connect a JobScaler to your Media Application Server.

NOTE: If you are installing a JobScaler and do not have a DHCP server on your network, Harmonic recommends that you use a DHCP server so IP addresses can be automatically configured on your network. Refer to the *Omneon ProXchange Installation and User's Guide* for more information.

Refer to *Figure 2–11* when completing these instructions.

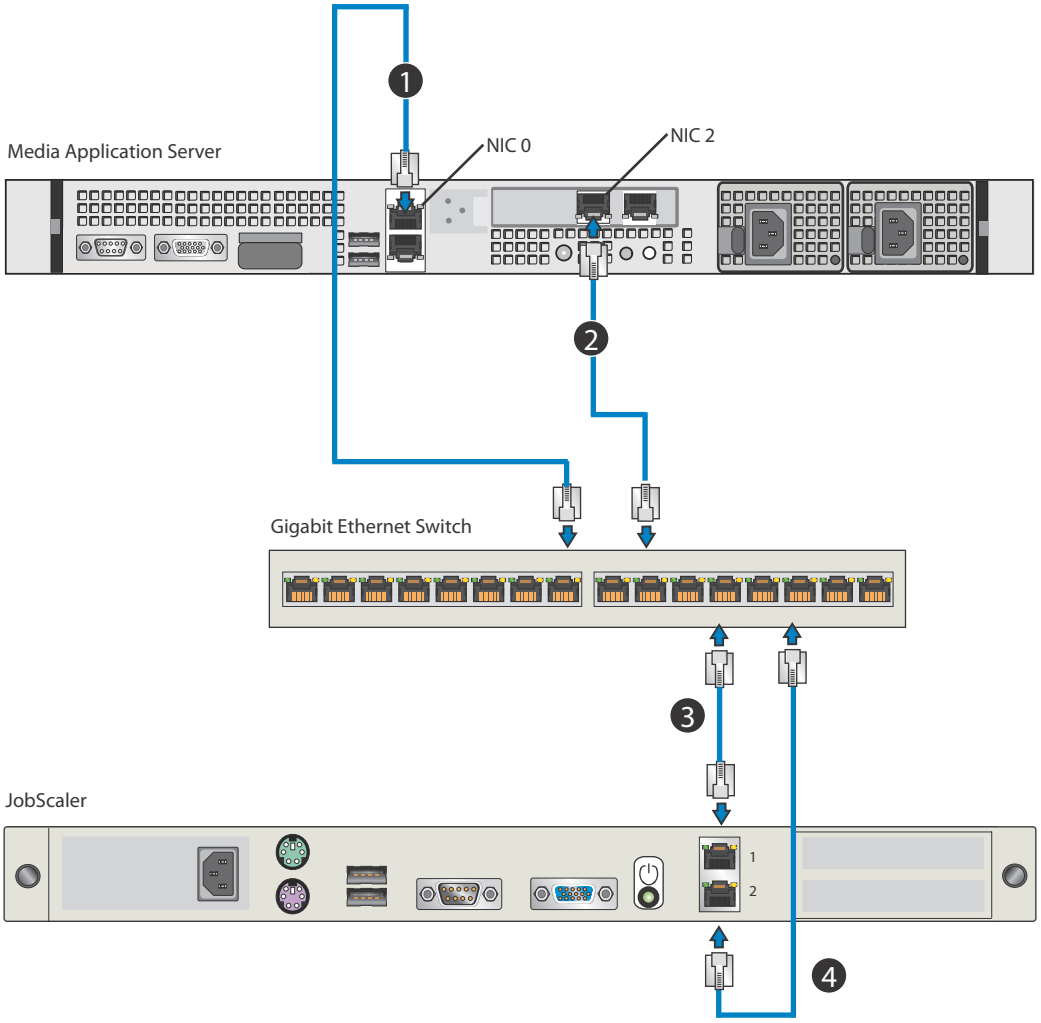

Figure 2–11: JobScaler and Network Connections

Follow the instructions in *Installing a Standalone Configuration* to connect and power up your Media Application Server.

1. Connect an Ethernet cable to NIC 0 on the back of the JobScaler, and then connect the other end of the cable to an available port on the client switch.
2. Connect an Ethernet cable to NIC 1 on the back of the JobScaler, and then connect the other end of the cable to an available port on the client switch.

© 2013 Harmonic Inc. All rights reserved.

3. Connect the power cord to the JobScaler and attach it to a power source.
4. Apply power to the JobScaler and then allow a boot up time of at least two minutes. Check the JobScaler power on indicator lights and ensure there are no problems. Refer to *JobScaler* for a description of the indicator lights

To begin using the Transcode service, refer to the *Media Application Server User Guide* for information.

© 2013 Harmonic Inc. All rights reserved.

Chapter 3
System Set Up and Configuration

This chapter includes the procedures for setting up and configuring your Media Application System. Perform the following procedures in the order described in this chapter:

- *Logging on to ProXplore*
- *Verifying the Media Application Server License*
- *Installing the Media Application Server License File*
- *Verifying Media Application Server Services*
- *Setting the Media Application Server Time Zone*
- *Configuring the Media Application Server*
- *Licensing Other Harmonic Devices*

Logging on to ProXplore

NOTE: Adobe Flash Player 9.0 is required for all browsers. If this version is not installed on your system, download the Flash Player from *http://www.adobe.com/downloads*.

To log on to ProXplore:

1. From your desktop or client PC, launch a Web browser (Internet Explorer, Safari, or Firefox).
2. In the address bar, type in the **IP address** or **domain name** (if set up) of the Media Application Server in the browser's address bar. This address can be obtained from your system administrator.
3. Enter the user name and password in the dialog box.
4. Click the **OK** button to log in.
5. When you log in for the first time you will be required to enter the license key as follows:
   - For a standalone system, enter the license key provided by Harmonic.
   - For an HA system, use the virtual IP of the HA system.
   - For a clustered system, use the virtual IP of the clustered system.
6. Click **OK**.

Verifying the Media Application Server License

Follow these steps to verify installation of the Media Application Server license.

To verify the MAS license:

1. From the Home page, click **Settings**.
2. Click the **License** tab.
3. Check the **Key** and **Value** columns to verify that the license is installed.

NOTE: If the Value column indicates that a licence is not found then follow the instructions in *Installing the Media Application Server License File* to install the license file.

© 2013 Harmonic Inc. All rights reserved.

Installing the Media Application Server License File

To install the license file:

1. From the Banner at the top of the window, click **Log Out**.
2. Copy the license file provided by Harmonic to the following directory on the Media Application Server:
   `/opt/msf/license/.msf.lic`

NOTE: Note that the file name starts with a dot, which means it is a hidden file.

The Media Application Server may take up to two minutes to recognize the license file.

3. Log back in to the Pro Application Portal by following the steps in *Logging on to ProXplore*.

Verifying Media Application Server Services

Follow these steps to verify that the Media Application Server services are running.

To verify MAS server services:

1. From the Home page, click **Setup**.
2. From the Navigation panel, click **Server Settings**.
3. Click the **License** tab.
4. Check the **Key** and **Status** columns to verify that each service is running.

Setting the Media Application Server Time Zone

During initial MAS installation and configuration, the MAS_cfg script sets the time zone for you. If the time zone in which the MAS operates should change, follow these steps to reset it.

1. Using PuTTY, from a client PC, log on to the Media Application Server with the following user name and password:

   User name: `ovnuser`

   Password: `OVN@SvCaUsa`
2. Check which time zone the server is currently using by typing the following at the command prompt:
   `date`

   The current time will appear in the following format:

   ```
   Mon June 12 10:45:27 PDT 2006
   ```

   In this example, “PDT” is the Pacific Daylight time zone. If the time zone is correct, disregard the rest of this section.
3. Use the **tzselect** program to access the file that holds the best set of time zone information for your location. These time zone files are located in subdirectories of **/usr/share/zoneinfo**.
4. Type the following at the command prompt:
   `tzselect`

   You will see something like the following, which lists available locations:

   ```
   [root@mse74_20 bin]# tzselect
   Please identify a location so that time zone rules can be set
   correctly.
   Please select a continent or ocean.
   ```

© 2013 Harmonic Inc. All rights reserved.

```
1) Africa
2) Americas
3) Antarctica
4) Arctic Ocean
5) Asia
6) Atlantic Ocean
7) Australia
8) Europe
9) Indian Ocean
10) Pacific Ocean
11) none - I want to specify the time zone using the Posix TZ format
```

5. Enter the number associated with your location. For example, type 5 if you are located in Asia.
6. Select the country in which you are located from the next screen. There may be additional choices to make depending on your location.
7. Answer the final question, “Is the above information OK?”, by entering a 1.

A text string identifies the most suitable time zone file.

```
TZ='Asia/Tokyo'; export TZ
```

8. Type the following command to make the changes permanent:

```
omtzselect Asia/Tokyo
```

Configuring the Media Application Server

System configuration consists of importing the configuration information from a SystemManager platform once all of the devices have been connected. The following configuration procedures are necessary for the Media Application Server to work with your existing Harmonic storage systems.

To configure the Media Application Server:

1. From the Home page, click **Setup**.
2. From the Navigation panel, click **SystemManagers**.
3. From the Toolbar, click the **Create a New SystemManager** icon.
4. From the **New SystemManager** dialog box, enter the IP address of the SystemManager.
5. Enter a name for this SystemManager.
6. Click **OK** to add the SystemManager.
7. To monitor the progress, check the **Status** column for the SystemManager you added.

Importing SystemManager Configuration Information

Follow these steps to import the configuration information from this SystemManager, including all of the storage servers that it manages and their IP addresses, file systems, and hosts.

To import SystemManager configuration information:

1. From the Home page, click **Setup**.
2. From the Navigation panel, click **SystemManagers**.
3. From the Content pane, select the SystemManager just added.
4. From the Toolbar, click the **Import from SystemManager** icon.
5. From the **Confirmation** dialog box, click **OK** to import the configuration information.

© 2013 Harmonic Inc. All rights reserved.

Licensing File Systems

File systems must be licensed before they can be managed. The number of file systems you can license is equal to the number of licenses purchased. Once all licenses are used, you cannot license additional file systems. However, you can transfer a license from one file system to another.

To license the file system:

1. From the Home page, click **File Browser**.
2. From the Navigation panel, expand **All Storage Servers**.
3. Expand the storage server you want.
4. Navigate the folder hierarchy to find the location you want.
5. From the Toolbar, click the **Edit** icon.
6. Select the **Licensed** check box and then click **OK**.

Transferring the License

To transfer the file system license:

1. From the Home page, click **File Browser**.
2. From the Navigation panel, expand **All Storage Servers**.
3. Expand the storage server you want.
4. Navigate the folder hierarchy to find the location you want.
5. From the Toolbar, click the **Edit** icon.
6. Clear the **Licensed** check box and then click **OK**.

NOTE: This action does not delete any folders that were already discovered; it only restricts future use.

7. From the Content pane, click the file system you want to license.
8. From the Toolbar, click the **Edit** icon.
9. Select the **Licensed** check box and then click **OK**.

Managing File Systems

Follow these steps to manage file systems and create a folder hierarchy. Harmonic recommends that you select areas within a file system to manage rather than “listen” at the file system level.

If the host is marked “Limited,” it cannot be used in transfers. The folders on the storage server can be managed using the other hosts of the storage device.

NOTE: The full path name for a Folder hierarchy cannot exceed 255 characters.

To manage a file system:

1. From the Home page, click **File Browser**.
2. From the Navigation panel, expand **All Storage Servers**.
3. Expand the storage server you want.
4. Navigate the folder hierarchy to find the location you want.
5. From the Content pane, select the folder you want to manage.
6. From the Toolbar, click the **Manage Selected Folder(s)** icon.
7. Complete the dialog box as follows:

© 2013 Harmonic Inc. All rights reserved.

- **Resynchronize This Folder**: Select this box to discover new or update existing files and delete non-existent files from the database (once the folder is selected for management).
- **Recurse All Subfolders Recursively**: Select this box to apply the **Resynchronize This Folder** setting to all of its subfolders.

8. Click **OK** to manage the folder.

   The folders are managed following the completion of any previously scheduled tasks. The color of the folder icon turns green in the Navigation panel and in the Content pane after the folder is managed.

Table 3–1: Folder Management Limits

Server	Software Release	Maximum Folders Managed
Spectrum/ MediaDeck	>5.0 100 folders and <5.0 10 folders	100 folders per available host. Hosts marked as “Limited” or “Real-Time” are not used.
	< 5.0	10 folders per available host. Hosts marked as “Full” are not used.
Harmonic MediaGrid	Any	Unlimited

Synchronizing File Systems

Synchronization of folders and subfolders allows you to see folders and subfolders for a given file system. Perform this procedure after the file system has been licensed.

To synchronize file systems:

1. From the Home page, click **File Browser**.
2. From the Navigation panel, expand **All Storage Servers**.
3. Expand the storage server you want.
4. Navigate the folder hierarchy to find the location you want.
5. From the Content pane, select the folder you want.
6. From the Toolbar, click the **Force Synchronization of Folder Content** icon.
7. Select the **Recurse on Subfolders** check box.
8. Click **OK** to synchronize the folder.
9. Repeat the above steps for each file system.

Scheduling a Remote Database Backup

IMPORTANT: Ensure that you complete this procedure before completing the MAS installation.

Refer to *Scheduling a Remote Database Backup* for instructions.

Scheduling a Local Database Backup

IMPORTANT: Ensure that you complete this procedure before completing the MAS installation.

Refer to *Scheduling a Local Database Backup* for instructions.

© 2013 Harmonic Inc. All rights reserved.

Enabling JobScalers to Consume Jobs

To enable JobScaler:

10. From the Home page, click **Transcode**.
11. From the Navigation panel, click **JobScalers**.
12. From the Content pane, select the JobScaler you want to enable.
13. From the Toolbar, click the **Configure JobScaler/ProxyGenerator to consume jobs from this MAS** icon.
14. Click **OK**.

Enabling ProxyGenerators to Consume Jobs

Follow these steps to set up a ProxyGenerator to consume jobs from the Media Application Server.

To enable ProxyGenerator:

1. From the Home page, click **Browse**.
2. From the Navigation panel, click **ProxyGenerators**.
3. From the Content pane, click the ProxyGenerator you want.
4. From the Toolbar, click the **Configure JobScaler/ProxyGenerator to consume jobs from this MAS** icon.
5. Click **OK**.

Creating BrowseStores

The Media Application Server system supports connections to a BrowseStore system, which can be used to store all proxy-related items. This section provides instructions for configuring a BrowseStore. Once set up, you can use the BrowseStore when defining the destination folder of browse rules or when manually executing a proxy generation.

NOTE: To successfully create a BrowseStore, a Samba share for the BrowseStore must exist on that system. The IP is provided when the BrowseStore is created.

To create a BrowseStore:

1. From the Home page, click **Setup**.
2. From the Navigation panel, click **Storage Servers**.
3. From the Toolbar, click the **New** > **BrowseStore**.
4. From the **Create BrowseStore** dialog box, enter the following information:

- **Name**: Enter the name for the BrowseStore.
- **URL**: Enter the URL in the format: `//IP_address/browsestore`.

NOTE: When using an A-2100 HA system for BrowseStore, use the virtual IP address to create the BrowseStore.

5. Click **OK**.

© 2013 Harmonic Inc. All rights reserved.

Licensing Other Harmonic Devices

All Harmonic devices must be licensed before use with the Media Application Server. Refer to the documentation for each product for licensing details, as follows:

- ProBrowse Generators

  See the *Omneon ProBrowse Installation and User's Guide* for instructions on licensing a ProBrowse Generator.

- JobScalers

  See the *Omneon ProXchange Installation and User's Guide* for instructions on licensing a JobScaler.

IMPORTANT: The version of Grid Service running on Media Application Server must match the version of software on the JobScaler. Follow the steps below to verify version compatibility.

Viewing the Software Versions for Managed Devices

a. From the Home page, click **Setup**.

b. From the Navigation panel, select a **Manager** or **Storage Server**.

All managed devices of that type appear in the Content pane. The software version for each device is indicated in the **Software Version** column.

© 2013 Harmonic Inc. All rights reserved.

Chapter 4
Software Upgrade and Reinstallation

This chapter includes the following sections:

- *Backing Up the Database*
- *Upgrading a Standalone Configuration*
- *Upgrading a High Availability Configuration*
- *Upgrading a Cluster Configuration*
- *Reinstalling a Standalone Configuration*
- *Reinstalling a High Availability Configuration*
- *Reinstalling a Cluster Configuration*

Backing Up the Database

Before performing any of the procedures in this chapter, Harmonic recommends that you back up the database for your Media Application Server.

Scheduling a Local Database Backup

IMPORTANT: Ensure that you complete this procedure before completing the MAS installation.

To schedule a local database backup:

1. From the Home page, click **Database**.
2. Click the **DB Backup** tab.
3. Select **Local**.
4. In the **Schedule** section, select **Now** to schedule the backup now or **Later** to schedule the backup for a later time. Offset this remote backup from the internal backup to avoid a conflict. Ensure that the scheduled time does not conflict with the built-in local scheduled backup.
5. Click **OK**.

Scheduling a Remote Database Backup

IMPORTANT: Ensure that you complete this procedure before completing the MAS installation.

Follow these instructions to configure a regularly-scheduled remote database backup via CIFS.

To schedule a remote database backup:

1. From the Home page, click **Database**.
2. Click the **DB Backup** tab.
3. Select **Remote**.
4. Complete the dialog box as follows:
   - **URL**: For a standard SAMBA share, use the following format: \\<IP address>\<fs0>\<directory>. Alternatively, for a Harmonic MediaGrid share through the ContentBridge, use the following format: \\clb_ip\<fsname_omneon>\<directory>.
   - **User**: Enter the CIFS user's name.

© 2013 Harmonic Inc. All rights reserved.

- **Password**: Enter the CIFS user's password.
- **Domain**: Enter the CIFS user's domain.
- **Mount Type**: Select CIFS.
- **Schedule**: Select **Now** to schedule the backup now or **Later** to schedule the backup for a later time. Offset this remote backup from the internal backup to avoid a conflict. Ensure that the scheduled time does not conflict with the built-in local scheduled backup.

5. Click **OK** to apply your settings.

Upgrading a Standalone Configuration

This section explains how to upgrade the operating system (OS) and system software on an Media Application Server standalone system.

Upgrading the Software

To upgrade a standalone system:

1. Download the Media Application Server software file from the Support server.

   All items are packaged in self-extracting files and available for download from the Support Server at the following location: *http://support.omneon.com/Updates/Omneon/Current/Media Application Server.*

   All files on the Support Server are password protected. Contact Technical Support if you need assistance with unlocking the files (see *Contacting the Technical Assistance Center*).
2. Open a web browser, and in the address bar, type the IP address for the server.
3. To upload the software, do the following:
   a. From the Home page, click **Software Builds**.
   b. From the Toolbar, click the **Upload Software** icon.
   c. Browse to the location where the tar.gz file is located.
   d. Click the **Upload** button.
4. To upgrade the system with the new software, do the following:
   a. From the Home page, click **Appliance**.
   b. From the Toolbar, click the **Upgrade Software** icon.
   c. Complete the dialog as follows:
      - **Build**: Select the build you want.
      - **Reboot**: Select this option to reboot MAS. Reboot is recommended when upgrading, but not always necessary. Rebooting updates the File System Driver (FSD) and cleans up old CIFS mounts.
      - **Skip ProXchange**: Select this option to upgrade ProXchange when upgrading MAS.

NOTE: MAS uses a component in ProXchange to enable transcoding to work correctly. If the MAS and ProXchange versions are mismatched, a JobScaler Operational Status error, "Grid Service Version Mismatch" appears. If MAS and ProXchange versions are matched, the Operational Status is "OK."

      - **Graceful**: Select this option to ensure that all services running on MAS are stopped. If there are any FTP transfers, MAS waits until those transfers are complete. MAS will not pick up new jobs.

© 2013 Harmonic Inc. All rights reserved.

For example, select this option if MAS has a node with jobs that are "in progress." This action prevents jobs from failing and ensures that they get transferred to the other node for processing. Will ensure all services within mas-app-server are stopped

If Graceful is not selected, MAS abruptly stops all services and begins to upgrade the software. Jobs in progress may fail.

If the duration of growing files is not known, do not select this option.

5. Click **OK** to begin the software upgrade.

   After the software is upgrade is complete and the system has restarted, log on to the UI.
6. From the Home page, click **Appliance**.
7. Verify that the software version is correct. If the status and version information is correct, the upgrade is done.

Rebooting a Standalone Configuration

Restart the Media Application Server after upgrading the system software and when instructed to do so by Harmonic Technical Support (see *Appendix A, Contacting the Technical Assistance Center*). Rebooting restarts MAS and all services.

To reboot a standalone configuration:

1. From the Home page, click **Appliance**.
2. From the Toolbar, click the **Reboot Server** icon.
3. Click **OK**.

You can log on to the server once it has completed start up.

Shutting Down a Standalone Configuration

If you need to power down a Media Application Server, you can do so using the Shutdown Server function.

NOTE: All connections are lost when the system is powered down.

To shut down a standalone configuration:

1. From the Home page, click **Appliance**.
2. From the Toolbar, click the **Shut Down** icon.
3. Click **OK**.

Upgrading a High Availability Configuration

When upgrading a Media Application Server high availability system, you must first upgrade the Standby server and then use the HA takeover feature to switch the Standby server to Active so the second Node can be upgraded. An HA server in Active mode cannot be upgraded.

Upgrading the Software

1. Download the Media Application Server software file from the Support server.

   All items are packaged in self-extracting files and available for download from the Support Server at the following location: *http://support.omneon.com/Updates/Omneon/Current/Media Application Server.*

© 2013 Harmonic Inc. All rights reserved.

All files on the Support Server are password protected. Contact Technical Support if you need assistance with unlocking the files (see *Contacting the Technical Assistance Center*).

2. Open a web browser and type the virtual IP address for the server node in the browser's address bar.
3. To upload the software, do the following:
   a. From the Home page, click **Software Builds**.
   b. From the Toolbar, click the **Upload Software** icon.
   c. Browse to the location where the tar.gz file is located.
   d. Click the **Upload** button.

   You are now ready to upgrade the system with the new software.
4. From the Home page, click **Appliance**.
5. From the Content pane, click the **Standby Node**.
6. Click the **Upgrade Software** button on the Toolbar.
7. Complete the dialog box as follows:
   - **Build**: Select the build you want.
   - **Reboot**: Select this option to reboot MAS. Reboot is recommended when upgrading, but not always necessary. Rebooting updates the File System Driver (FSD) and cleans up old CIFS mounts.
   - **Skip ProXchange**: Select this option to upgrade ProXchange when upgrading MAS.

NOTE: MAS uses a component in ProXchange to enable transcoding to work correctly. If the MAS and ProXchange versions are mismatched, a JobScaler Operational Status error, "Grid Service Version Mismatch" appears. If MAS and ProXchange versions are matched, the Operational Status is "OK."

   - **Graceful**: Select this option to ensure that all services running on MAS are stopped. If there are any FTP transfers, MAS waits until those transfers are complete. MAS will not pick up new jobs.

     For example, select this option if MAS has a node with jobs that are "in progress." This action prevents jobs from failing and ensures that they get transferred to the other node for processing. Will ensure all services within mas-app-server are stopped

     If Graceful is not selected, MAS abruptly stops all services and begins to upgrade the software. Jobs in progress may fail.

     If the duration of growing files is not known, do not select this option.
8. Click **OK** to begin the software upgrade.
9. After the software upgrade is complete and the system has restarted, log on to the UI.
10. From the Home page, click **Appliance**. Verify that the software version is correct. If the status and version information is correct, the upgrade is done.
11. Click the **Standby Node** and then click the **HA Take Over** icon on the Toolbar.

    This changes the HA status so that the node which was active now becomes the standby node.
12. Repeat steps *Step 5* through *Step 10*.

Rebooting a High Availability Configuration

Restart the HA servers after upgrading the system software and when instructed to do so by Harmonic Technical Support (see *Appendix A, Contacting the Technical Assistance Center*).

© 2013 Harmonic Inc. All rights reserved.

NOTE: Rebooting the server stops selected services.

To reboot an HA configuration:

1. Open a web browser and type the virtual IP address for the server node in the browser's address bar.
2. From the Home page, click **Appliance**.
3. From the Content pane, click the server node to reboot.
4. From the Toolbar, click the **Reboot Server** icon.
5. Click **OK**.

You can log on to the server once it has completed start up.

Repairing the Database on a High Availability Configuration

If you need to re-synchronize the databases between the active and standby server, use the Repair DB function.

To repair a database on an HA configuration:

1. Open a web browser and type the virtual IP address for the server node in the browser's address bar.
2. From the Home page, click **Appliance**.
3. From the Content pane, click the server node to repair.
4. From the Toolbar, click the **Repair DB** icon.
5. Click **OK**.

Shutting Down a High Availability Configuration

If you need to power down a Media Application Server, you can do so using the Shutdown Server function.

To shutdown an HA configuration:

NOTE: All connections are lost when the system is powered down.

1. Open a web browser and type the virtual IP address for the server node in the browser's address bar.
2. From the Home page, click **Appliance**.
3. From the Content pane, click the server node to shut down.
4. From the Toolbar, click the **Shut Down** icon.
5. Click **OK**.

Upgrading a Cluster Configuration

When upgrading an Media Application Server cluster system, you upgrade the following Nodes:

- DB Node 2 (Standby)
- DB Node 1 (Active)
- App Node 2 (Standby)
- App Node 1 (Active)

© 2013 Harmonic Inc. All rights reserved.

You must first upgrade the Standby database Node (DB Node 2), and then use the takeover feature to switch the Standby database Node to the Active database. Next, upgrade the new Standby DB Node (DB Node 1). When the upgrade is complete, use the takeover feature to switch the standby database Node (DB Node 1) back to the Active database again.

Next, upgrade the Standby application Node (App Node 2), and then use the takeover feature to switch the Standby application Node to the Active server. Finally, upgrade the new Standby App Node (App Node 1).

NOTE: A cluster server in Active mode can be upgraded if the other Node is stopped or powered down.

Upgrading Software on the DB Nodes

To upgrade software on the DB nodes:

1. Download the Media Application Server software file from the Support server.

   All items are packaged in self-extracting files and available for download from the Support Server at the following location: *http://support.omneon.com/Updates/Omneon/Current/MAS*

   All files on the Support Server are password protected. Contact Technical Support if you need assistance with unlocking the files (see *Contacting the Technical Assistance Center*).
2. Open a web browser and type the virtual IP address for the App Node in the browser's address bar.
3. To upload the software, do the following:
   a. From the Home page, click **Software Builds**.
   b. From the Toolbar, click the **Upload Software** icon.
   c. Browse to the location where the tar.gz file is located.
   d. Click the **Upload** button.

   You are now ready to upgrade the DB nodes with the new software.
4. From the Home page, click **Appliance**.
5. From the Content pane, click the **Standby DB Node**.
6. From the Toolbar, click the **Upgrade Software** icon.
7. Complete the dialog as follows:
   - **Build**: Select the build you want.
   - **Reboot**: Select this option to reboot MAS. Reboot is recommended when upgrading, but not always necessary. Rebooting updates the File System Driver (FSD) and cleans up old CIFS mounts.
   - **Skip ProXchange**: Select this option to upgrade ProXchange when upgrading MAS.

NOTE: MAS uses a component in ProXchange to enable transcoding to work correctly. If the MAS and ProXchange versions are mismatched, a JobScaler Operational Status error, "Grid Service Version Mismatch" appears. If MAS and ProXchange versions are matched, the Operational Status is "OK."

   - **Graceful**: Select this option to ensure that all services running on MAS are stopped. If there are any FTP transfers, MAS waits until those transfers are complete. MAS will not pick up new jobs.

     For example, select this option if MAS has a node with jobs that are "in progress." This action prevents jobs from failing and ensures that they get transferred to the other node for processing. Will ensure all services within mas-app-server are stopped

© 2013 Harmonic Inc. All rights reserved.

If Graceful is not selected, MAS abruptly stops all services and begins to upgrade the software. Jobs in progress may fail.

If the duration of growing files is not known, do not select this option.

8. Click **OK** to begin the software upgrade.
9. After the software is upgrade is complete and the system has restarted, log on to the UI.
10. From the Home page, click **Appliance**. Verify that the software version is correct.
11. From the Content pane, click the **Standby Node**.
12. From the Toolbar, click **HA Take Over** icon.

This action changes the status so that the DB node which was active now becomes the standby DB node.

13. Log in to the UI again.
14. Repeat *Step 5* through *Step 10*.

Upgrading Software on the App Nodes

To upgrade software on the app nodes:

1. Download the Media Application Server software file from the Support server.

   All items are packaged in self-extracting files and available for download from the Support Server at the following location: *http://support.omneon.com/Updates/Omneon/Current/MAS*

   All files on the Support Server are password protected. Contact Technical Support if you need assistance with unlocking the files (see *Contacting the Technical Assistance Center*).
2. Open a web browser and type the virtual IP address for the App Node in the browser's address bar.
3. To upload the software, do the following:
   a. From the Home page, click **Software Builds**.
   b. From the Toolbar, click the **Upload Software** icon.
   c. Browse to the location where the tar.gz file is located.
   d. Click the **Upload** button.

   You are now ready to upgrade the DB nodes with the new software.
4. From the Content pane, click the **Standby App Node**.
5. From the Toolbar, click the **Upgrade Software** icon.
6. Complete the dialog box as follows:
   - **Build**: Select the build you want.
   - **Reboot**: Select this option to reboot MAS. Reboot is recommended when upgrading, but not always necessary. Rebooting updates the File System Driver (FSD) and cleans up old CIFS mounts.
   - **Skip ProXchange**: Select this option to upgrade ProXchange when upgrading MAS.

NOTE: MAS uses a component in ProXchange to enable transcoding to work correctly. If the MAS and ProXchange versions are mismatched, a JobScaler Operational Status error, "Grid Service Version Mismatch" appears. If MAS and ProXchange versions are matched, the Operational Status is "OK."

   - **Graceful**: Select this option to ensure that all services running on MAS are stopped. If there are any FTP transfers, MAS waits until those transfers are complete. MAS will not pick up new jobs.

© 2013 Harmonic Inc. All rights reserved.

For example, select this option if MAS has a node with jobs that are "in progress." This action prevents jobs from failing and ensures that they get transferred to the other node for processing. Will ensure all services within mas-app-server are stopped

If Graceful is not selected, MAS abruptly stops all services and begins to upgrade the software. Jobs in progress may fail.

If the duration of growing files is not known, do not select this option.

7. Click **OK** to begin the software upgrade.
8. After the software upgrade is complete and the system has restarted, log on to the UI.
9. From the Home page, click **Appliance**. Verify that the software version is correct. If the status and version information is correct, the upgrade is done.
10. From the Content pane, click the **Standby Node**.
11. From the Toolbar, click the **HA Take Over** icon.

This changes the HA status so that the app node which was active now becomes the standby app node.

12. Log in to the UI again.
13. Repeat *Step 4* through *Step 9*.

Rebooting a Cluster Configuration

Restart the Media Application Servers after upgrading the system software and when instructed to do so by Harmonic Technical Support.

To reboot App Nodes:

1. Open a web browser and type the virtual IP address for the app node in the browser's address bar.
2. From the Home page, click **Appliance**.
3. From the Content pane, click the Server Node to reboot.
4. From the Toolbar, click the **Reboot Server** icon.
5. Click **OK**.

You can log on to the server once it has completed start up.

To reboot DB Nodes:

1. Open a web browser and type the virtual IP address for the app node in the browser's address bar.
2. From the Home page, click **Appliance**.
3. From the Content pane, click the DB node to reboot.
4. From the Toolbar, click the **Reboot Server** icon.
5. Click **OK**.

NOTE: If the Active Node is rebooted, the node status will switch. For example, the active node will become standby and standby node will become active.

Shutting Down a Cluster Configuration

Should you need to do so, you can use the Shutdown function to power down a Media Application Server.

© 2013 Harmonic Inc. All rights reserved.

NOTE: All connections are lost when the system is powered down.

To shut down App Nodes:

1. Open a web browser and type the virtual IP address for the app node in the browser's address bar.
2. From the Home page, click **Appliance**.
3. From the Content pane, click the Server Node to shut down.
4. From the Toolbar, click the **Shut Down** icon.
5. Click **OK**.

To shut down DB Nodes:

1. Open a web browser and type the virtual IP address for the app node in the browser's address bar.
2. From the Home page, click **Appliance**.
3. From the Content pane, click the DB node to shutdown down.
4. From the Toolbar, click the **Shut Down** icon.
5. Click **OK**.

Reinstalling a Standalone Configuration

Follow the procedures below to reinstall the operating system and software on your Media Application Server.

CAUTION: The Media Application Server server and the High Availability servers ship with the operating system and system software pre-installed. Reinstalling the software removes all data on the system. Reinstalling the Operating System (OS), but not the software, removes all data on the system. Only perform the procedures in this section if directed by Technical Support.

CAUTION: Reinstalling the operating system deletes the database. Back up your database files before reinstalling the operating system.

Reinstalling the Operating System

Before you begin the installation, make sure you have reviewed the *Requirements* section of this guide.

To reinstall the operating system:

1. Attach a monitor, keyboard, and mouse to the Media Application Server rear panel.

© 2013 Harmonic Inc. All rights reserved.

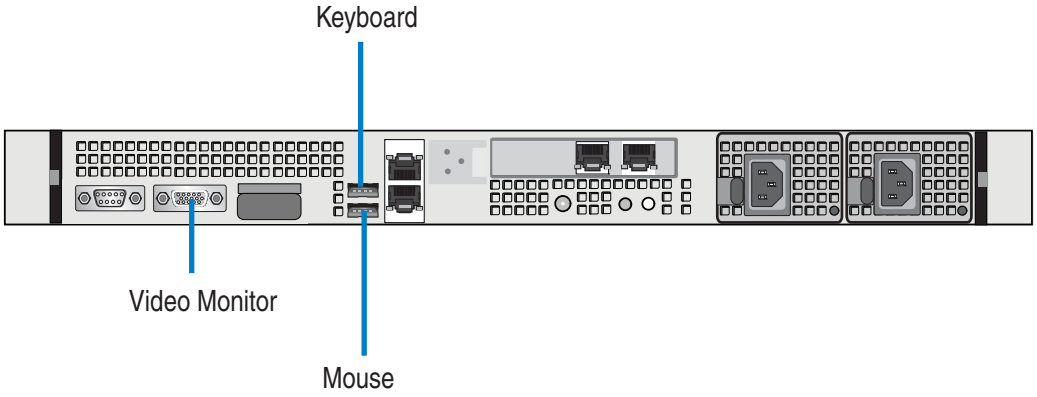

Figure 4–1: Monitor, Keyboard, and Mouse

If the appliance is powered up, as soon as you attach a monitor, the Fedora Login window displays.

Figure 4–2: Fedora Login

2. Log in to the Fedora interface with the following user name and password:

   User name: `ovnuser`

   Password: `OVN@SvCaUsa`

3. From Fedora, shut down the Media Application Server by opening the **System** menu and selecting **Shut Down.**

© 2013 Harmonic Inc. All rights reserved.

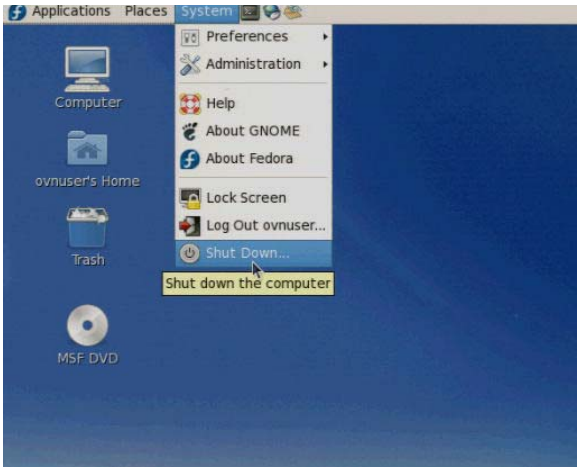

Figure 4–3: System Shut Down

Wait until the power-on indicator on the front panel shows that the system has shut down.

4. Press the **power button** on the Media Application Server to boot the server, and then immediately insert the Media Application Server operating system DVD into the DVD-ROM drive.
5. Wait for the Warning message to appear in the monitor.
6. At the boot prompt, type `Yes` to begin the automated operating system installation. This process takes approximately 15 minutes.

After the installation completes, the server automatically ejects the DVD and then reboots the server.

Reinstalling the Software

To reinstall the software:

1. After the server has rebooted following the operating system installation, the Fedora Login window displays. Log in with the following user name and password:

   User name: `ovnuser`

   Password: `OVN@SvCaUsa`
2. From the Fedora UI, open a Terminal session by clicking **Applications** > **System Tools** > **Terminal** (*Figure 4–4*).

IMPORTANT: Once you have logged on to the server, each command that requires root permission must be preceded by the "sudo" command. (The entries requiring the command are identified in the following steps.) After the password is entered, you may complete "sudo" commands without a password for five minutes.

© 2013 Harmonic Inc. All rights reserved.

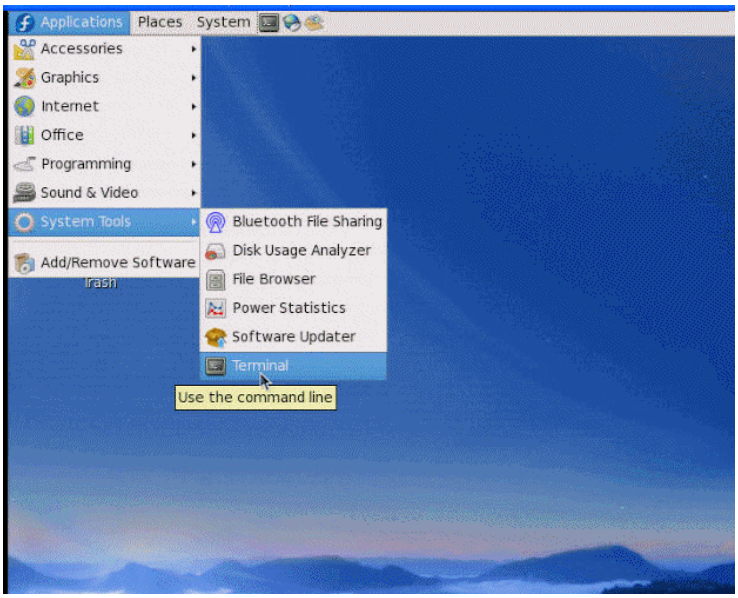

Figure 4–4: Open Terminal Session

3. From the terminal window, type the following command to open the DVD-ROM tray:
   `sudo eject`

Figure 4–5: Open DVD-ROM Tray

4. Insert the System Software DVD into the DVD-ROM tray, and then close the tray.
5. Mount the DVD-ROM drive by typing the following command:
   `sudo mount /dev/cdrom /mnt/cdrom`
6. When prompted, enter the `ovnuser` password.

   If the mount was successful, the following message displays:

   `mount: block device /dev/cdrom is write protected, mounting read-only`
7. Change to the cdrom directory by typing the following at the command prompt:
   `cd /mnt/cdrom`
8. Execute the installation script by typing the following at the command prompt:
   `sudo -s ./install.sh`
9. The installation script asks what type of installation you would like. Type an `a` for **Stand Alone Appliance**, and press **Enter**.

© 2013 Harmonic Inc. All rights reserved.

NOTE: The installation can take up to six minutes.

After the software is installed, the installation script instructions you to run `/opt/msf/bin/MAS_cfg` to configure your system.

10. Return to the home directory by typing:
    `cd <enter>`

Reconfiguring the Media Application Server

1. Initiate the configuration script by typing:
   `sudo /opt/msf/bin/MAS_cfg`
2. When prompted, enter the network settings for the Media Application Server network.

The configuration script asks a series of questions requiring information specific to your site. To complete the configuration script, you need to supply the information shown in *Table 4–1*. The **Value** column is left empty in case you want to print this table and use it for your system settings.

Table 4–1: Media Application Server Standalone Configuration

Property	Description	Value
MAS Public Subnet	The MAS public subnet. The first three octets are used.	
Gateway IP address	IP address of the default Gateway to be used	
Netmask IP address	The IP address for the Netmask of the Media Application Server network.	
Standalone IP address	IP address of the Media Application Server standalone system.	
Host Name for Standalone System	This is the host name for the Media Application Server standalone system.	
Domain Name	This is the Media Application Server domain name.	
IP address of the Primary DNS Server	This is the IP address of the primary DNS server.	
IP address of the Secondary DNS Server	This is the IP address of the secondary DNS server. You will be prompted to enter a secondary server only after you have entered a primary DNS server.	
IP address of the NTP Server	This is the IP address of the NTP server.	
Time Zone	If you are unsure of the correct time zone string, run `/opt/msf/bin/omtzselect` to determine the text string. For more information about setting the time zone, refer to *Setting the Media Application Server Time Zone*.	

© 2013 Harmonic Inc. All rights reserved.

3. When prompted, verify your network settings and then type **Yes** to accept the settings or **No** to edit the settings.
4. Once you have verified your network settings, the script asks if you want to apply the settings. If the settings are correct, type **Yes** to apply the settings.

   The server automatically reboots.
5. If you do not want to apply the network settings at this time, type **No**. You can apply the settings at another time by running the following command:
   ```
   sudo /opt/msf/bin/applyconfig.sh
   ```
   Where requested, provide the password for ovnuser.

NOTE: The configuration files can be recovered from the following directory: /opt/msf/bin/config.

6. After the server has rebooted, remove the System Software DVD from the DVD-ROM tray.
7. From a Fedora Terminal session, check the status of the server by typing the following command:
   ```
   sudo msf status
   ```
   The system returns the following:

   For a standalone server, the status will show:
   ```
   sudo msf status
   watchdogd (pid 30828) is running...
   ha not configured
   msf-rpc-server is running (21611).
   msf-callback-watcher is running (21683).
   mysqld (pid 30166) is running...
   Omneon Media Services Framework App Server is running (30311).
   omserver (pid 30522) is running...
   Omneon Media Services Framework FrontPanel is not running.
   rinda_ring.rb (pid 30597) is running;   rinda_ts.rb (pid 30695) is
   running...
   gridMgr.rb (pid 25867) is running...
   ```
8. When prompted for a password, type the `ovnuser` password.

Table 4–2 shows a brief description of the Media Application Server services.

Table 4–2: Media Application Server Services

Service	Description
msf-app-server	Application server.
msf-bbb	Bulletin board service, required for Grid Service.
msf-callback-watcher	Runs the process called omdam that handles the callback notification from Harmonic MediaGrid.
msf-db	Database server.
msf-frontpanel	Updates the front bezel of the MAS appliance.
msf-grid	Grid service that establishes the grid on a Harmonic MediaGrid cluster.

© 2013 Harmonic Inc. All rights reserved.

Table 4–2: Media Application Server Services

Service	Description
msf-omserver	For SystemManager use.
msf-rpc	Runs the process called omdam that talks to the player/media APIs.
Omwatchdog	A watchdog that restarts services that stopped or quit unexpectedly.

NOTE: If the Media Application Server status shows that services are not running, contact Technical Support for assistance (see *Contacting the Technical Assistance Center*).

9. Follow the instructions in *Logging on to ProXplore* to log on to the Pro Application Portal and enter the license key provided by Harmonic.

Reinstalling a High Availability Configuration

Follow the procedures below to reinstall the operating system and software on your Media Application Server.

CAUTION: The Media Application Server server and the High Availability servers ship with the operating system and system software pre-installed. Reinstalling the software removes all data on the system. Reinstalling the software removes all data on the system. Reinstalling the Operating System (OS), but not the software, removes all data on the system. Only perform the procedures in this section if directed by Technical Support.

CAUTION: Reinstalling the operating system deletes the database. Back up your database files before reinstalling the operating system.

Before you begin the installation:

- Make sure you have reviewed the *Requirements* section of this guide.
- Identify and label which server will be known as Node 1 and which will be Node 2. This distinction is important when installing the software.

Reinstalling the Operating System

1. Attach a monitor, keyboard, and mouse to the rear panel of the first Media Application Server (Node 1). See *Figure 4–1*.

   If the appliance is powered up, as soon as you attach a monitor, the Fedora Login window displays. See *Figure 4–2*.
2. Log in to the Fedora interface with the following user name and password:

   User name: `ovnuser`

   Password: `OVN@SvCaUsa`
3. From Fedora, shut down the Media Application Server by opening the **System** menu and selecting **Shut Down**. See *Figure 4–3*.

   Wait until the power-on indicator on the front panel shows that the system has shut down.

© 2013 Harmonic Inc. All rights reserved.

4. Press the power button on the Media Application Server to boot the server and then immediately insert the Media Application Server operating system DVD into the DVD-ROM drive.
5. Wait for the Warning message to appear in the monitor.
6. At the boot prompt, type `Yes` to begin the automated operating system installation. This process takes approximately 15 minutes.

   After the installation completes, the server automatically ejects the DVD and then reboots the server.
7. Repeat these steps for the second HA Media Application Server (Node 2).

Reinstalling the Software

To install the software on a Media Application Server high availability system, you must first install the software on the Node 1 server and then install the software on the Node 2 server. Follow the instructions provided below.

Reinstalling Software on Node 1

1. After the Node 1 server has rebooted following the operating system installation, the Fedora Login window displays. Log in with the following user name and password:

   User name: `ovnuser`

   Password: `OVN@SvCaUsa`
2. From the Fedora UI, open a Terminal session by clicking **Applications** > **System Tools** > **Terminal.** See *Figure 4–4*.

IMPORTANT: Once you have logged on to the server, each command that requires root permission must be preceded by the "sudo" command. (The entries requiring the command are identified in the following steps.) After the password is entered, you may complete "sudo" commands without a password for five minutes.

3. From the terminal window, type the following command to open the DVD-ROM tray:
   `sudo eject`

   (See *Figure 4–5*.)
4. Insert the System Software DVD into the DVD-ROM tray, and then close the tray.
5. Mount the DVD-ROM drive by typing the following command:
   `sudo mount /dev/cdrom /mnt/cdrom`
6. When prompted, enter the `ovnuser` password.

   If the mount was successful, the following message displays:

   `mount: block device /dev/cdrom is write protected, mounting read-only`
7. Change to the cdrom directory by typing the following at the command prompt:
   `cd /mnt/cdrom`
8. Execute the installation script by typing the following at the command prompt:
   `sudo -s ./install.sh`
9. The installation script asks what type of installation you would like. Type a `b` for **High Availability**, and press **Enter**.

NOTE: The installation may take up to six minutes.

10. The installation script asks which Node you would like to install. Type an `a` for **Node 1**, and press **Enter**.

© 2013 Harmonic Inc. All rights reserved.

After the software is installed, the installation script directs you to run `/opt/msf/bin/MAS_cfg` to complete the installation.

11. Return to the home directory by typing:
    `cd <enter>`

Reconfiguring Node 1

1. Initiate the configuration script by typing:
   `sudo /opt/msf/bin/MAS_cfg`

   When prompted, enter the network settings for the Media Application Server HA system.

   The configuration script asks a series of questions requiring information specific to your site. To complete the configuration script, you need to supply the information shown in *Table 4–3*. The **Value** column is left empty in case you want to print this table and use it for your system settings.

Table 4–3: Media Application Servers High Availability Configuration

Property	Description	Value
MAS Public Subnet	The MAS public subnet. The first three octets are used.	
Gateway IP address	This is the IP address of the default Gateway to be used.	
Netmask IP address	The IP address for the Netmask of the Media Application Server network.	
Node 1 IP address	This is the IP address of the Node 1 Media Application Server.	
Node 2 IP address	This is the IP address of the Node 2 Media Application Server.	
Virtual IP address of the HA system	This IP address is used by the Active and Standby servers (Node 1 and Node 2) if one of the servers is unresponsive. Choose an IP address that will not conflict with other devices on the client network.	
Multicast group IP address of HA System	Multicast group IP address used by heartbeat service	239.<3 octets of the Virtual IP address>
Host Name for Node 1	This is the host name for Node 1.	
Host Name for Node 2	This is the host name for Node 2.	
Domain Name	This is the Media Application Server domain name.	
IP address of the Primary DNS Server	This is the IP address of the primary DNS server.	

© 2013 Harmonic Inc. All rights reserved.

Table 4–3: Media Application Servers High Availability Configuration

Property	Description	Value
IP address of the Secondary DNS Server	This is the IP address of the secondary DNS server. You will be prompted to enter a secondary server only after you have entered a primary DNS server.	
IP address of the NTP Server	This is the IP address of the NTP server.	
Time Zone	If you are unsure of the correct time zone string, run `/opt/msf/bin/omtzselect` to determine the text string. For more information about setting the time zone, refer to *Setting the Media Application Server Time Zone*.	

2. When prompted, verify your network settings and then type **Yes** to accept the settings or **No** to edit the settings.
3. Once you have verified your network settings, the script asks if you want to apply the settings. If the settings are correct, type **Yes** to apply the settings.

   The server automatically reboots.

   If you do not want to apply the network settings at this time, type **No**. You can apply the settings at another time by running the following command:

   ```
   sudo /opt/msf/bin/applyconfig.sh
   ```
4. Where requested, provide the password for ovnuser.

NOTE: The configuration files can be recovered from the following directory: /opt/msf/bin/config.

5. After the server has rebooted, remove the System Software DVD from the DVD-ROM tray.
6. From a Fedora Terminal session, check the status of the server by typing the following command:

   ```
   sudo msf status
   ```

   If the system is Active, it will return the following:

   ```
   [root@msfsvr_199_70 localbrowse]# sudo msf status
   watchdogd (pid 3295) is running...
   fullNode, ha configured, active
   msf-rpc-server is running (1830).
   msf-callback-watcher is running (2032).
   mysqld (pid 2572) is running...
   Omneon Media Services Framework App Server is running (2918).
   omserver (pid 3167) is running...
   Omneon Media Services Framework FrontPanel is not running.
   rinda_ring.rb (pid 2068) is running;   rinda_ts.rb (pid 2212) is
   running...
   gridMgr.rb (pid 2315 3220) is running...
   ```
7. When prompted for a password, type the `ovnuser` password.

Table 4–4 shows a brief description of the Media Application Server services.

© 2013 Harmonic Inc. All rights reserved.

Table 4–4: Media Application Server Services

Service	Description
App Node	
msf-app-server	Application server.
msf-bbb	Bulletin board service, required for Grid Service (if Node is Active).
msf-callback-watcher	Runs the process called omdam that handles the callback notification from Harmonic MediaGrid.
msf-frontpanel	Updates the front bezel of the Media Application Server.
msf-grid	Grid service that establishes the grid on a Harmonic MediaGrid cluster (if Node is Active).
msf-ha	Controls the heartbeat only. Checks when the Active server Node stops or loses connection.
msf-omserver	For SystemManager use.
msf-rpc	Runs the process called omdam that talks to the player/media APIs.
omwatchdog	A watchdog that restarts services that stopped or quit unexpectedly.
DB Node	
msf-ha	Controls the heartbeat.
msf-db	Database server (if Node is Active).
msf-omserver	For SystemManager use.
omwatchdog	A watchdog that restarts services that stopped or quit unexpectedly.

NOTE: If the Media Application Server status shows that services are not running or if the system is not Active, contact Technical Support for assistance (see *Contacting the Technical Assistance Center*).

Reinstalling Software on Node 2

1. After the Node 2 server has rebooted following the operating system installation, the Fedora Login window displays. Log in with the following user name and password:

   User name: `ovnuser`

   Password: `OVN@SvCaUsa`
2. From the Fedora UI, open a Terminal session by clicking **Applications** > **System Tools** > **Terminal.**
3. From the terminal window, type the following command to open the DVD-ROM tray:
   `sudo eject`
4. Insert the System Software DVD into the DVD-ROM tray, and then close the tray.
5. Mount the DVD-ROM drive by typing the following command:
   `sudo mount /dev/cdrom /mnt/cdrom`
6. When prompted, enter the `ovnuser` password.

© 2013 Harmonic Inc. All rights reserved.

If the mount was successful, the following message displays:

```
mount: block device /dev/cdrom is write protected, mounting read-only
```

7. Change to the cdrom directory by typing the following at the command prompt:
   `cd /mnt/cdrom`
8. Execute the installation script by typing the following at the command prompt:
   `sudo -s ./install.sh`
9. The installation script asks what type of installation you would like. Type a `b` for High Availability, and press **Enter**.
10. The installation script asks which Node you would like to install. Type a `b` for **Node 2**, and press **Enter**.

    The installation script installs the software.The installation may take up to six minutes.
11. Return to the home directory by typing:
    `cd <enter>`

Reconfiguring Node 2

1. Ensure disks are 100% synched across the Active and Standby Nodes using the following command from the Standby Node:
   `sudo watch –n5 /sbin/service status`
2. Run the following command:
   `sudo /opt/msf/bin/applyconfig.sh. <node1_IP_address>`

   When prompted, provide the password for ovnuser.

   This command applies the configuration settings from the Active (Node 1) server to the Standby (Node 2) server.

   The server automatically reboots.

NOTE: The configuration files can be recovered from the following directory: /opt/msf/bin/config.

3. Verify that all Media Application Server services are running. From the `$` prompt, type the following command:
   `sudo msf status`

   If the server is Standby, it will return the following:

```
[root@msfsvr_199_70 localbrowse]# sudo msf status
watchdogd (pid 3295) is running...
fullNode, ha configured, standby
msf-rpc-server is running (1830).
msf-callback-watcher is running (2032).
mysqld (pid 2572) is running...
Omneon Media Services Framework App Server not running (2918).
omserver (pid 3167) is running...
Omneon Media Services Framework FrontPanel is not running.
rinda_ring.rb is stopped;  rinda_ts.rb is stopped
gridMgr.rb is stopped
```

   When prompted for a password, type the `ovnuser` password.

   A summary of the services appears. Refer to *Table 4–4* for a brief description of the Media Application Server services.

© 2013 Harmonic Inc. All rights reserved.

NOTE: If the Media Application Server status shows that services are not running, contact Technical Support for assistance (see *Contacting the Technical Assistance Center*).

4. Verify that the Standby server is configured for Standby by typing the following command:
   `getNodeType.sh`

   This completes the hardware installation of the Media Application Server HA system. Refer to *System Set Up and Configuration* to continue setting up your Media Application Server.
5. To set up authentication between the pair of nodes, execute the following command from each node:
   `sudo addPeer.sh`

Reinstalling a Cluster Configuration

Follow the procedures below to reinstall the operating system and software on your Media Application Server cluster configuration.

CAUTION: The Media Application Server and the Cluster servers ship with the operating system and system software pre-installed. Reinstalling the software removes all data on the system. Reinstalling the Operating System (OS), but not the software, removes all data on the system. Reinstalling the software removes all data on the system. Only perform the procedures in this section if directed by Technical Support.

CAUTION: Reinstalling the operating system deletes the database. Back up your database files before reinstalling the operating system.

Before You Begin

- Make sure you have reviewed the *Requirements* section of this guide.
- Identify and label which server is the App Node 1 (Active), App Node 2 (Standby) DB Node 1 (Active), and DB Node 2 (Standby). This distinction is important when installing the software.

Reinstalling the Operating System

1. Attach a monitor, keyboard, and mouse to the rear panel of the first Media Application Server (DB Node 1). See *Figure 4–1*..

   If the appliance is powered up, as soon as you attach a monitor, the Fedora Login window displays. See *Figure 4–2*.
2. Log in to the Fedora interface with the following user name and password:

   User name: `ovnuser`

   Password: `OVN@SvCaUsa`
3. From Fedora, shut down the Media Application Server by opening the **System** menu and selecting **Shut Down**. See *Figure 4–3*.

   Wait until the power-on indicator on the front panel shows that the system has shut down.
4. Press the power button on the Media Application Server to boot the server and then immediately insert the Media Application Server operating system DVD into the DVD-ROM drive.
5. Wait for the Warning message to appear in the monitor.

© 2013 Harmonic Inc. All rights reserved.

6. At the boot prompt, type `Yes` to begin the automated operating system installation. This process takes approximately 15 minutes.

   After the installation completes, the server automatically ejects the DVD and then reboots the server.
7. Repeat these steps for the second Media Application Server (DB Node 2), the third Media Application Server (App Node 1), and the fourth Media Application Server (App Node 2).

Reinstalling the Software

This section explains how to reinstall software and reconfigure Nodes for a Media Application Server cluster configuration. Follow the instructions provided below.

Reinstalling Software on DB Node 1

1. After the DB Node 1 server has rebooted following the operating system installation, the Fedora Login window displays. Log in with the following user name and password:

   User name: `ovnuser`

   Password: `OVN@SvCaUsa`
2. From the Fedora UI, open a Terminal session by clicking **Applications** > **System Tools** > **Terminal**. See *Figure 4–4*.

IMPORTANT: Once you have logged on to the server, each command that requires root permission must be preceded by the "sudo" command. (The entries requiring the command are identified in the following steps.) After the password is entered, you may complete "sudo" commands without a password for five minutes.

3. From the terminal window, type the following command to open the DVD-ROM tray:
   `sudo eject`

   See *Figure 4–5*.
4. Insert the System Software DVD into the DVD-ROM tray, and then close the tray.
5. Mount the DVD-ROM drive by typing the following command:
   `sudo mount /dev/cdrom /mnt/cdrom`
6. When prompted, enter the `ovnuser` password.

   If the mount was successful, the following message displays:

   `mount: block device /dev/cdrom is write protected, mounting read-only`
7. Change to the cdrom directory by typing the following at the command prompt:
   `cd /mnt/cdrom`
8. Execute the installation script by typing the following at the command prompt:
   `sudo -s ./install.sh`
9. The installation script asks what type of installation you would like. Type a `c` for **Clustered**, and press **Enter**.
10. Then installation script asks which cluster installation. Type a `b` for **Database Node**, and press **Enter**.
11. Then installation script asks Which Node are you installing. Type an `a` for **Node 1**, and press **Enter**.

NOTE: The installation may take up to six minutes.

© 2013 Harmonic Inc. All rights reserved.

After the software is installed, the installation script directs you to run `/opt/msf/bin/MAS_cfg` to complete the installation.

12. Return to the home directory by typing:
    `cd <enter>`

Reconfiguring DB Node 1

1. To initiate the configuration script, type the following command:
   `sudo /opt/msf/bin/MAS_cfg`
2. When prompted, enter the network settings for the Media Application Server cluster system.

The configuration script asks a series of questions requiring information specific to your site. To complete the configuration script, you need to supply the information shown in *Table 4–5*. The **Value** column is left empty in case you want to print this table and use it for your system settings.

Table 4–5: Media Application Server Cluster Configuration

Property	Description	Value
MAS Public Subnet	The MAS public subnet. The first three octets are used.	
Gateway IP address	This is the IP address of the default Gateway to be used.	
Netmask IP address	The IP address for the Netmask of the Media Application Server network.	
App Node 1 IP address	This is the IP address of the Application (App) Node 1 Media Application Server.	
App Node 2 IP address	This is the IP address of the App Node 2 Media Application Server.	
Virtual IP address of the App servers	This IP address is used by the Active and Standby App servers (Node 1 and Node 2) if one of the servers is unresponsive. Choose an IP address that will not conflict with other devices on the client network.	
Multicast group IP address of HA System	This IP address is used by heartbeat service between the App Node 1 and App Node 2.	239.< 3 octets of Virtual IP address of the App servers>
DB Node 1 IP address	This is the IP address of the Database (DB) Node 1 Media Application Server.	
DB Node 2 IP address	This is the IP address of the DB Node 2 Media Application Server.	
Virtual IP address of the DB servers	This IP address is used by the Active and Standby DB servers (Node 1 and Node 2) if one of the servers is unresponsive. Choose an IP address that will not conflict with other devices on the client network.	

© 2013 Harmonic Inc. All rights reserved.

Table 4–5: Media Application Server Cluster Configuration

Property	Description	Value
Multicast group IP address of DB Servers	This IP address is used by heartbeat service between the DB Node 1 and DB Node 2.	239.< 3 octets of Virtual IP address of the DB servers>
Host Name for **App Server Node 1**	This is the host name for App server Node 1.	
Host Name for **App Server Node 2**	This is the host name for App server Node 2.	
Host Name for DB Server Node 1	This is the host name for DB server Node 1.	
Host Name for DB Server Node 2	This is the host name for DB server Node 2.	
Domain Name	This is the Media Application Server domain name.	
IP address of the Primary DNS Server	This is the IP address of the primary DNS server.	
IP address of the Secondary DNS Server	This is the IP address of the secondary DNS server.	
IP address of the NTP Server	This is the IP address of the NTP server.	
Time Zone	If you are unsure of the correct time zone string, run `/opt/msf/bin/omtzselect` to determine the text string. For more information about setting the time zone, refer to *Setting the Media Application Server Time Zone*.	

3. When prompted, verify your network settings and then type **Yes** to accept the settings or **No** to edit the settings.
4. Once you have verified your network settings, the script asks if you want to apply the settings. If the settings are correct, type **Yes** to apply the settings.

   The server automatically reboots.

   If you do not want to apply the network settings at this time, type **No**. You can apply the settings at another time by running the following command:

   ```
   sudo /opt/msf/bin/applyconfig.sh
   ```

   Where requested, provide the password for ovnuser.

NOTE: The configuration files can be recovered from the following directory: /opt/msf/bin/config.

5. After the server has rebooted, remove the System Software DVD from the DVD-ROM tray.

© 2013 Harmonic Inc. All rights reserved.

6. From a Fedora Terminal session, check the status of the server by typing the following command:
   `sudo msf status`

   If the system is Active, it will return the following:

   ```
   [root@msfdbnode_212_13 ~]# sudo msf status
   watchdogd (pid 29412) is running...
   dbNode, ha configured, active
   mysqld (pid 29034) is running...
   omserver (pid 29297) is running...
   Omneon Media Services Framework FrontPanel is not running.
   ```
7. When prompted for a password, type the `ovnuser` password.

Table 4–5 shows a brief description of the Media Application Server services.

NOTE: If the Media Application Server status shows that services are not running or if the system is not Active, contact Technical Support for assistance (see *Contacting the Technical Assistance Center*).

Reinstalling Software on DB Node 2 Server

1. After the DB Node 2 server has rebooted following the operating system installation, the Fedora Login window displays. Log in with the following user name and password:

   User name: `ovnuser`

   Password: `OVN@SvCaUsa`
2. From the Fedora UI, open a Terminal session by clicking **Applications** > **System Tools** > **Terminal.**
3. From the terminal window, type the following command to open the DVD-ROM tray:
   `sudo eject`
4. Insert the System Software DVD into the DVD-ROM tray, and then close the tray.
5. Mount the DVD-ROM drive by typing the following command:
   `sudo mount /dev/cdrom /mnt/cdrom`
6. When prompted, enter the `ovnuser` password.

   If the mount was successful, the following message displays:

   `mount: block device /dev/cdrom is write protected, mounting read-only`
7. Change to the cdrom directory by typing the following at the command prompt:
   `cd /mnt/cdrom`
8. Execute the installation script by typing the following at the command prompt:
   `sudo -s ./install.sh`
9. The installation script asks what type of installation you would like. Type a `c` for **Clustered** and press **Enter**.
10. Then installation script asks which cluster installation. Type a `b` for **Database Node**, and press **Enter**.
11. The installation script asks which Node are you installing. Type a `b` for **Node 2**, and press **Enter**.

    The installation script installs the software.

NOTE: The installation may take up to six minutes.

© 2013 Harmonic Inc. All rights reserved.

Reconfiguring DB Node 2

1. Run the following command:
   ```
   sudo /opt/msf/bin/applyconfig.sh <node1_IP_address>
   ```
   When prompted, provide the password for ovnuser.

   This command applies the configuration settings from the Active (DB Node 1) server to the Standby (DB Node 2) server.

   The server automatically reboots.

NOTE: The configuration files can be recovered from the following directory: /opt/msf/bin/config.

2. Return to the home directory by typing:
   ```
   cd <enter>
   ```
3. Verify that all Media Application Server services are running. From the `$` prompt, type the following command:
   ```
   sudo msf status
   ```
   The system returns the following:
   ```
   [ovnuser@msfdbnode_212_14 ~]$ sudo msf status
   watchdogd (pid 3712) is running...
   dbNode, ha configured, standby
   mysqld (pid 3331) is running...
   omserver (pid 3596) is running...
   Omneon Media Services Framework FrontPanel is not running.
   ```
   When prompted for a password, type the `ovnuser` password.

   A summary of the services appears. Refer to *Table 4–5* for a brief description of the Media Application Server services.

NOTE: If the Media Application Server status shows that services are not running, contact Technical Support for assistance (see *Contacting the Technical Assistance Center*).

4. Verify that the Standby server is configured for Standby by typing the following command:
   ```
   getNodeType.sh
   ```
   If the system is Standby, it will return the following:
   ```
   dbNode, ha configured, standby
   ```

Reinstalling Software on App Node 1

1. After the App Node 1 server has rebooted following the operating system installation, the Fedora Login window displays. Log in with the following user name and password:

   User name: `ovnuser`

   Password: `OVN@SvCaUsa`
2. From the Fedora UI, open a Terminal session by clicking **Applications** > **System Tools** > **Terminal** (See *Figure 4–4*).

IMPORTANT: Once you have logged on to the server, each command that requires root permission must be preceded by the "sudo" command. (The entries requiring the command are identified in the following steps.) After the password is entered, you may complete "sudo" commands without a password for five minutes.

3. From the terminal window, type the following command to open the DVD-ROM tray:

© 2013 Harmonic Inc. All rights reserved.

```
sudo eject
```

See *Figure 4–5*.

4. Insert the System Software DVD into the DVD-ROM tray, and then close the tray.
5. Mount the DVD-ROM drive by typing the following command:
   ```
   sudo mount /dev/cdrom /mnt/cdrom
   ```
6. When prompted, enter the `ovnuser` password.

   If the mount was successful, the following message displays:

   ```
   mount: block device /dev/cdrom is write protected, mounting read-only
   ```
7. Change to the cdrom directory by typing the following at the command prompt:
   ```
   cd /mnt/cdrom
   ```
8. Execute the installation script by typing the following at the command prompt:
   ```
   sudo -s ./install.sh
   ```
9. The installation script asks what type of installation you would like. Type a `c` for **Clustered**, and press **Enter**.
10. Then installation script asks which cluster installation. Type an `a` for **App Server Node**, and press **Enter**.
11. The installation script asks which Node are you installing. Type an `a` for **Node 1**, and press **Enter**.

NOTE: The installation may take up to six minutes.

After the software is installed, the installation script directs you to run `/opt/msf/bin/MAS_cfg` to complete the installation.

12. Return to the home directory by typing:
    ```
    cd <enter>
    ```

Reconfiguring App Node 1

NOTE: The configuration files can be recovered from the following directory: /opt/msf/bin/config.

1. Run the following command:
   ```
   sudo /opt/msf/bin/applyconfig.sh <dbnode1 IP address>
   ```

   When prompted, provide the password for ovnuser.

   This command applies the configuration settings from the Active (DB Node 1) server to the Standby (App Node 1) server.

   The server automatically reboots.
2. After the server has rebooted, remove the System Software DVD from the DVD-ROM tray.
3. From a Fedora Terminal session, check the status of the server by typing the following command:
   ```
   sudo msf status
   ```

   The system returns the following:

   ```
   watchdogd (pid 7864) is running...
   appNode, ha configured, active
   msf-rpc-server is running (15307).
   msf-callback-watcher is running (7065).
   memcached is running (7254).
   Omneon Media Services Framework App Server is running (7319).
   ```

© 2013 Harmonic Inc. All rights reserved.

```
omserver (pid 7515) is running...
Omneon Media Services Framework FrontPanel is not running.
rinda_ring.rb (pid 7606) is running;   rinda_ts.rb (pid 7721) is
running...
gridMgr.rb (pid 27011) is running...
```

4. When prompted for a password, type the `ovnuser` password.

   Refer to *Table 4–5* for a brief description of the Media Application Server services.

   If the system is Active, it will return the following:

   ```
   appNode, ha configured, active
   ```

NOTE: If the Media Application Server status shows that services are not running or if the system is not Active, contact Technical Support for assistance (see *Contacting the Technical Assistance Center*).

Reinstalling Software on App Node 2 Server

1. After the App Node 2 server has rebooted following the operating system installation, the Fedora Login window displays. Log in with the following user name and password:

   User name: `ovnuser`

   Password: `OVN@SvCaUsa`
2. From the Fedora UI, open a Terminal session by clicking **Applications** > **System Tools** > **Terminal.**
3. From the terminal window, type the following command to open the DVD-ROM tray:
   `sudo eject`
4. Insert the System Software DVD into the DVD-ROM tray, and then close the tray.
5. Mount the DVD-ROM drive by typing the following command:
   `sudo mount /dev/cdrom /mnt/cdrom`
6. When prompted, enter the ovnuser password.

   If the mount was successful, the following message displays:

   ```
   mount: block device /dev/cdrom is write protected, mounting read-only
   ```
7. Change to the cdrom directory by typing the following at the command prompt:
   `cd /mnt/cdrom`
8. Execute the installation script by typing the following at the command prompt:
   `sudo -s ./install.sh`
9. The installation script asks what type of installation you would like. Type a `c` for **Clustered** and press **Enter**.
10. Then installation script asks which cluster installation. Type an `a` for **App Server Node,** and press **Enter**.
11. The installation script asks which Node are you installing. Type a `b` for **Node 2**, and press **Enter**.

    The installation script installs the software. The installation may take up to six minutes.
12. Return to the home directory by typing:
    `cd <enter>`

Reconfiguring App Node 2

1. Run the following command:
   `sudo /opt/msf/bin/applyconfig.sh <dbnode1_IP_address>`

© 2013 Harmonic Inc. All rights reserved.

When prompted, provide the password for ovnuser.

This command applies the configuration settings from the Active (DB Node 1) server to the Standby (App Node 2) server.

The server automatically reboots.

NOTE: The configuration files can be recovered from the following directory: /opt/msf/bin/config.

2. Verify that all Media Application Server services are running. From the $ prompt, type the following command:

   ```
   sudo msf status
   ```

   The system returns the following:

   ```
   watchdogd (pid 1823) is running...
   appNode, ha configured, standby
   msf-rpc-server is running (1010).
   msf-callback-watcher is running (1070).
   memcached is running (1263).
   Omneon Media Services Framework App Server is running (1473).
   omserver (pid 1665) is running...
   Omneon Media Services Framework FrontPanel is not running.
   rinda_ring.rb is stopped;  rinda_ts.rb is stopped
   gridMgr.rb is stopped
   ```

   When prompted for a password, type the `ovnuser` password.

   A summary of the services appears. Refer to *Table 4–5* for a brief description of the Media Application Server services.

NOTE: If the Media Application Server status shows that services are not running, contact Technical Support for assistance (see *Contacting the Technical Assistance Center*).

3. Verify that the Standby server is configured for Standby by typing the following command:

   ```
   getNodeStatus.sh
   ```

   It will return the following if the server is Standby:

   ```
   appNode, ha configured, standby
   ```

   This completes the hardware installation of the Media Application Server cluster system. Refer to *System Set Up and Configuration* to continue setting up your Media Application Server.

4. To set up authentication between the pair of nodes, execute the following command from each node:

   ```
   sudo addPeer.sh
   ```

© 2013 Harmonic Inc. All rights reserved.

Appendix A
Contacting the Technical Assistance Center

Harmonic Global Service and Support has many Technical Assistance Centers (TAC) located globally, but virtually co-located where our customers can obtain technical assistance or request on-site visits from the Regional Field Service Management team. The TAC operates a Follow-The-Sun support model to provide Global Technical Support anytime, anywhere, through a single case management and virtual telephone system. Depending on time of day, anywhere in the world, we will receive and address your calls or emails in one of our global support centers. The Follow-the-Sun model greatly benefits our customers by providing continuous problem resolution and escalation of issues around the clock.

Table A–1: For Distribution and Delivery (Legacy Harmonic) Products

Region	Telephone Technical Support	E-mail
Americas	888.673.4896 or 408.490.6477	*support@harmonicinc.com*
EME	+44.1252.555.450	*support.emea@harmonicinc.com*
Asia Pacific – Other Territories	+852.3713.9300	*hongkongtechsupport@harmonicinc.com*
India	+44.1252.555.450	*support.emea@harmonicinc.com*
Russia	+7.495.926.4608	*rusupport@harmonicinc.com*
Africa	+44.1252.555.450	*support.emea@harmonicinc.com*
Mainland China	+86.10.8391.3313	*chinatechsupport@harmonicinc.com*

Table A–2: For Production and Playout (Legacy Omneon and Rhozet) Products

Region	Telephone Technical Support	E-mail
Americas	888.673.4896 or 408.490.6477	*omneon.support@harmonicinc.com*
EMEA	+44.1252.555.450	*omneonemeasupport@harmonicinc.com*
Asia Pacific – Other Territories	+65.6542.0050	*apacsupport@harmonicinc.com*
Japan	+81.3.5565.6737	*japansupport@harmonicinc.com*
China - Mainland	+86.10.8391.3313	*chinasupport@harmonicinc.com*
Russia and CIS	+7.495.926.4608	*rusupport@harmonicinc.com*

© 2013 Harmonic Inc. All rights reserved.

The Harmonic Inc. support website is:

http://www.harmonicinc.com/content/technical-support

The Harmonic Inc. Distribution and Delivery product software downloads site is:

ftp://ftp.harmonicinc.com

The Harmonic Inc. Playout and Production software downloads site is:

ftp://ftp.Omneon.com//Updates/Omneon/Current/

The Harmonic Inc. corporate address is:

Harmonic Inc.
4300 North First St.
San Jose, CA 95134, U.S.A.
Attn: Customer Support

The corporate telephone numbers for Harmonic Inc. are:

Tel. 1.800.788.1330 (from the U.S. and Canada)
Tel. +1.408.542.2500 (outside the U.S. and Canada)
Fax.+1.408.542.2511

© 2013 Harmonic Inc. All rights reserved.

Appendix B
Compliance, Safety, and Agency Approvals

NOTE: The information in this appendix may apply to purchased products.

This equipment generates, uses, and can radiate radio frequency energy. It may cause harmful interference to radio communications if it is not installed and used in accordance with the instructions in this manual. Operation of this equipment in a residential area is likely to cause harmful interference. If this occurs, the user will be required to correct the interference at his or her own expense.

This equipment has been tested and found to comply with the limits for a Class A digital device, pursuant to Part 15, Subpart B of the Federal Communications Commission (FCC) rules.

These limits are designed to provide reasonable protection against harmful interference when the equipment is operated in a commercial environment.

This device complies with Part 15 of the FCC rules. Operation is subject to the following two conditions: (1) this device may not cause harmful interference, and (2) this device must accept any interference received, including interference that may cause undesired operation.

Connections between the Harmonic equipment and other equipment must be made in a manner that is consistent with maintaining compliance with FCC radio frequency emission limits. Modifications to this equipment not expressly approved by Harmonic may void the authority granted to the user by the FCC to operate this equipment.

WEEE/RoHS Compliance Policy

Harmonic Inc. intends to comply fully with the European Union's Directive 2002/96/EC as amended, on Waste Electrical and Electronic Equipment, also known as "WEEE," and Directive 2002/95/EC, as amended, on the Restriction of use of Hazardous Substances, also known as "RoHS."

Harmonic will ensure that product which cannot be reused will be recycled in compliance with the WEEE Directive. To that end, users are advised that (1) Harmonic equipment is not to be discarded in household or office garbage, (2) Harmonic Inc. will pay the freight for shipment of equipment to be disposed of if it is returned to Harmonic, (3) customers should call the normal RMA telephone numbers to arrange for such shipment, and (4) for additional and updated information on this process customers may consult the Harmonic website: http://harmonicinc.com/pa_weee_recycle.cfm.

Harmonic will ensure that its products will be either reused or recycled in compliance with the WEEE Directive. For the latest information concerning Harmonic's WEEE/RoHS Compliance Policy and its Recycling and Take-Back process, please visit our web site.

© 2013 Harmonic Inc. All rights reserved.

Restricted Substance Statement

Harmonic products contain less than the permitted limits for the six restricted substances except where exemptions published in the RoHS Directive are applicable. This statement is based on vendor-supplied analysis or material certifications, and/or lab test results of the component raw materials used in the manufacture of Harmonic products.

Restricted Substance	Permitted limit*
Cadmium (Cd)	≤ 0.01% (Cd)
Lead (Pb)	≤ 0.1% (Pb
Chromium (VI) (Cr (VI))	≤ 0.1% (Cr VI)
Mercury (Hg)	≤ 0.1% (Hg)
Polybrominated Biphenyls (PBBs)	≤ 0.1% (PBBs)
*Homogeneous material definition as per the EU Directive.	

产品中的有毒有害物质或元素的名称及含量表

Names and Contents of Toxic and Hazardous Substances

This section lists the names of contents of toxic or hazardous substances, or elements in the products if the part is present.

该表显示哈雷公司产品中可能含有的有毒有害物质元配件的信息，除了来源于元配件供应商的物料成分资料，亦来自其它相关的机构与资料。哈雷产品不一定使用这些元配件。

This table shows those components where hazardous substances may be found in Harmonic products based on, among other things, material content information provided by third party suppliers. These components may or may not be part of the product.

除非特殊注明，哈雷公司产品的环保使用期限 均为 20 年。该环保使用期限的有效条件为：必须遵循该产品使用手册的规定，对该产品进行使用或存储。

The Environmental Protective Use Period for Harmonic products is 20 years unless displayed otherwise on the product. The EPUP period is valid only when the products are operated or stored as per the conditions specified in the product manual.

部件名称 (Part name)	有毒有害物质或元素 (Hazardous Substance)					
	铅 (PB)	汞 (Hg)	镉 (Cd)	六价铬 (CrVI)	多溴联苯 (PBB)	多溴二苯醚 (PBDE)
印刷线路板 (Printed Circuit Assemblies)	X	O	O	O	O	O
机械组件 (Mechanical Subassemblies)	X	O	O	O	O	O
光学组件 (Optical Subassemblies)	X	O	O	O	O	O

© 2013 Harmonic Inc. All rights reserved.

部件名称 (Part name)	有毒有害物质或元素 (Hazardous Substance)					
	铅 (PB)	汞 (Hg)	镉 (Cd)	六价铬 (CrVI)	多溴联苯 (PBB)	多溴二苯醚 (PBDE)
电源 (Power Supplies)	X	O	O	O	O	O
缆线 / 线束 (Cables, harnesses)	X	O	O	O	O	O
屏幕 / 显示器 (Screens, Monitors)	X	O	O	O	O	O
金属零件 (Metal Parts)	O	O	O	O	O	O
塑料 / 发泡材料 (Plastics, foams)	O	O	O	O	O	O
电池 (Batteries)	O	O	O	O	O	O

O: 表示在该部件的所有均质材料中，此类有毒有害物质的含量均小于 SJ/T11363-2006 标准所规定的限量。

O: Indicates the content of the toxic and hazardous substances at the homogeneous material level of the parts is below the limit defined in SJ/T11363 2006 standard.

X: 表示至少在该部件的某一均质材料中，此类有毒有害物质的含量超出 SJ/T11363-2006 标准规定的限量。

X: Indicates that the content of the toxic and hazardous substances in at least one of the homogeneous materials of the parts is above the limit defined in SJ/T11363 2006 standard.

기종별	사용자 안내문
A급 기기 (업무용 정보통신기기)	이기기는 업무용으로 전자파적합등록을 한 기기이오니 판매자 또는 사용자는 이 점을 주의하시기 바라며 만약 잘못 판매 구입 하였을 때에는 가정용으로 교환하시기 바랍니다.

© 2013 Harmonic Inc. All rights reserved.

Standards and Agency Approval

The following tables list regulatory standards and agency approvals:

North America

Standards	Agency Approval
EMI: FCC Part 15, Subpart B, ICES-003, Issue 2, Class A	FCC
Safety: UL60950-1, CAN/CSA C22.2 No. 60950-1	cTUV-us Mark

Europe

Standards	Agency Approval
EMI/EMC: EN55022 Class A, EN55024, EN61000-3-2 and EN61000-3-3	CE
Safety: EN 60950-1, EN60825-1	TUV-GS or T-Mark, CE
RoHS2: Directive 2011/65/EU	CE

Japan

Standards	Agency Approval
EMI: VCCI V-3, VCCI V-3 / 2000.04, VCCI V-3 2009	VCCI

Australia and New Zealand

Standards	Agency Approval
EMI: AS/NZS CISPR22	AS/NZS CISPR22

Canadian EMC Notice of Compliance

English: This digital apparatus does not exceed the Class A limits for the radio noise emissions from digital apparatus set out in the Radio Interference Regulations of the Canadian Department of Commerce.

French: Le prèsent appareil numérique n'émet pas de bruits radioélectriques dèpassant les limites applicables aux appareils numériques de la classe A prescrites dans le Règlement sur le brouillage radioélectrique édicté par le ministère des Communications du Canada.

EU Manufacturer's Declaration of Conformity

We: Harmonic, Inc.

Declare under our sole responsibility that the products identified below comply with the following EU Directives and Harmonized Standards stated.

© 2013 Harmonic Inc. All rights reserved.

Applicable EU Directives for ContentBridge:

Regulatory Compliance	Directive(s)	Notes
ContentBridge 1000		
EMC	FCC Part 15, ICES-003 CISPR 22 2004/108/EC Electromagnetic Compatibility including amendments	Class A for Digital Equipment, USA, Canada EN55022, EN61000-3-2, EN61000-3-3, and EN55024
Safety	TUV 2006/95/EC Low Voltage Directive including amendments	UL60950-1, CAN/CSA-C22.2 No. 60950-1Safety of Information Technology Equipment
ContentBridge 2010A		
EMC	FCC ICES CE Mark VCCI BSMI C-Tick SABS CCC MIC	Class A Class B EN 55022 Class B, EN55024, EN61000-3-2, EN61000-3-3 Class B Class A Class B Class B Class B Class A
Safety	UL CAN/CSA EN IEC	UL 60950-1 CAN/CSA-C22.2 No. 60950-1 EN 60950-1, EN60825-1, EN60825-2 IEC60950-1

© 2013 Harmonic Inc. All rights reserved.

Regulatory Compliance	Directive(s)	Notes
ContentBridge 2010B/2010C		
EMC	ACMA or C-Tick BELLIS KVALITET ICES CNCA or CCC KONCAR CE SII VCCI OTAN – CKT INSM NEMKO GOST SABS KCC BSMI UKRTEST or UKRSERTCOMPUTER FCC STZ ICT	Class A
Safety	IRAM BELLIS SCC CNCA or CCC KONCAR CE TUV IECEE IECEE CB SII OTAN – CKT KEBS KUCAS NYCE or NOM INSM SONCAP NEMKO GOST KSA ICCP NRCS BSMI UKRTEST or UKRSERTCOMPUTER NRTL STZ	

© 2013 Harmonic Inc. All rights reserved.

Applicable EU Directives for ContentDirector:

Regulatory Compliance	Directive(s)	Notes
ContentDirector 1000C, 10000D, and 2000		
EMC	ACMA or C-Tick BELLIS KVALITET ICES CNCA or CCC KONCAR CE SII VCCI OTAN – CKT INSM NEMKO GOST SABS KCC BSMI UKRTEST or UKRSERTCOMPUTER FCC STZ ICT	Class A
Safety	IRAM BELLIS SCC CNCA or CCC KONCAR CE TUV IECEE IECEE CB SII OTAN – CKT KEBS KUCAS NYCE or NOM INSM SONCAP NEMKO GOST KSA ICCP NRCS BSMI UKRTEST or UKRSERTCOMPUTER NRTL STZ	

© 2013 Harmonic Inc. All rights reserved.

Applicable EU Directives for ContentServer and ContentStore:

Regulatory Compliance	Directive(s)	Notes
ContentServer 1042B/1042C-DP		
EMC	FCC Part 15, ICES-003 CISPR 22 89/336/EEC Electromagnetic Compatibility including amendments	Class A for Digital Equipment, USA, Canada EN55022A:1998+A1:2000 +A2:2003 EN61000-3-2:2000, EN61000-3-3:1995+A1:2001 EN55024:1998 +A1:2001+A2:2003 Immunity
Safety	TUV 73/23/EEC Low Voltage Directive including amendments	UL60950-1: 2003 CAN/CSA-C22.2 60950-1-3 Safety of Information Technology Equipment
ContentServer 2122/2124		
EMC	FCC Part 15, ICES-003 CISPR 22 89/336/EEC Electromagnetic Compatibility including amendments	Class A for Digital Equipment, USA, Canada EN55022 EMISSIONS EN61000-3-2, EN61000-3-3 EN55024 Immunity
Safety	UL60950 73/23/EEC Low Voltage Directive including amendments	IEC 60950 CAN/CSA-C22.2 60950 Safety of Information Technology Equipment
ContentServer 3000		
EMC	FCC (CFR 47, Part 15) Class A IECS-003, Issue 3, Class A	EN 55022, EN1000-2-3, EN1000-3-3 EN55024, AS/NZS 3548 (CISPR-22 Class A) VCCI V-3
Safety	IEC/EN 60950-1: CB report and CB certificate UL/CSA 60950-1: cTUVus-mark	
ContentStore 3160		

© 2013 Harmonic Inc. All rights reserved.

Regulatory Compliance	Directive(s)	Notes
EMC	FCC (CFR 47, Part 15) Class A IECS-003, Issue 3, Class A	EN 55022, EN1000-2-3, EN1000-3-3 EN55024, AS/NZS 3548 (CISPR-22 Class A) VCCI V-3
Safety	IEC/EN 60950-1: CB report and CB certificate UL/CSA 60950-1: cTUVus-mark	

© 2013 Harmonic Inc. All rights reserved.

Applicable EU Directives for Network Switch 2924, 2948 and 5406:

Regulatory Compliance	Directive(s)	Notes
CE	Low Voltage Directive is: 2006/95/EC, EMC directive is: 2004/108/EC	EN60950-1 Safety of Information Technology Equipment
EMC	FCC VCCI EN CISPR-22	Class A Class A 55022 Class A
Safety	CSA 22.2 UL IEC EN	No. 60950-1 60950-1 60950-1 60950-1

Applicable EU Directives for the MediaDeck 7000:

Regulatory Compliance	Directive(s)	Notes
CE	Low Voltage Directive (73/23/EEC) including amendments	EN60950-1: 1992, A1 + A2 + A3 + A4 Safety of Information Technology Equipment
EMC	FCC Part 15, ICES-003 ICES-003 Directive of Electromagnetic Compatibility EN55022: 1998 EN55024: 1998 CISPR 22	Class A for Digital Equipment, USA Class A for Digital Equipment, Canada (89/336/EEC) including amendments Emissions from Information Technology Equipment Immunity for Information Technology Equipment Class A Others

© 2013 Harmonic Inc. All rights reserved.

Applicable EU Directives for the MediaDirector 2201, 2202, 2251, 2252, and the MediaCenter:

Regulatory Compliance	Directive(s)	Notes
CE	Low Voltage Directive is 2006/95/EC, EMC directive is: 2004/108/EC	EN 60950-1 Safety of Information Technology Equipment
EMC	FCC Part 15 Class A ICES-003 VCCI Class A CISPR 22 Class A CNS 13438 EN 55022 Class A KN22 Class A	USA Canada Japan Australia, New Zealand, EU Taiwan EU Korea
Safety	UL 60950-1 First, Second Edition CSA C22.2	

© 2013 Harmonic Inc. All rights reserved.

Applicable EU Directives for MediaPort Series 5000, MediaPort 7000 Series, and ChannelPort:

Regulatory Compliance	Directive(s)	Notes
MediaPort 5000 Series, MediaPort 7000 Series, and ChannelPort		
CE	Low Voltage Directive is: 2006/95/EC, EMC directive is: 2004/108/EC	EN60950-1 Safety of Information Technology Equipment
EMC	FCC Part 15, ICES-003 ICES-003 Directive of Electromagnetic Compatibility EN55022 EN55024 CISPR22	Class A for Digital Equipment, USA Class A for Digital Equipment, Canada (89/336/EEC) including amendments Emissions from Information Technology Equipment Immunity for Information Technology Equipment Class A Others
Safety	UL/CUL, CAN/CSA C22.2 No. 950-95 Third Edition and UL1950 Third Edition UL/CUL, CAN/CSA C22.2 No. 60950-1-03 First Edition and UL60950-1 First Edition	
ChannelPort		
Safety	UL 670950-1, 2nd Edition CSA C22.2 No. 60950-1-03, 2nd Edition IEC 60950-1:2005 (Second Edition) EN 670950-1,2006 + A11:2009	

Applicable EU Directives for the Ellipse1000 and 2000:

Regulatory Compliance	Directive(s)	Notes
CE	Low Voltage Directive is: 2006/95/EC, EMC directive is: 2004/108/EC	
EMC	EN55022, EN61000-3-2, EN61000-3-3 and EN55024. VCCI V-3, AS/NZS CISPR22, KN22 and KN24	
Safety	EN60950-1, EN60525-1, EN60825-2, UL60950-1, CSA C22.2 No. 60950-1	

© 2013 Harmonic Inc. All rights reserved.

Applicable EU Directives for the Electra 1000, 5000, 5400, and 9200 encoders:

Regulatory Compliance	Directive(s)	Notes
CE	Low Voltage Directive is: 2006/95/EC, EMC directive is: 2004/108/EC	
EMC	EN55022, EN61000-3-2, EN61000-3-3 and EN55024. VCCI V-3, AS/NZS CISPR22	
Safety	EN60950-1, EN60525-1, EN60825-2, UL60950-1, CSA C22.2 No. 60950-1	

Applicable EU Directives for the Electra 8000 encoders:

Regulatory Compliance	Directive(s)	Notes
CE	Low Voltage Directive is: 2006/95/EC, EMC directive is: 2004/108/EC	
EMC	EN55022, EN61000-3-2, EN61000-3-3 and EN55024. VCCI V-3, AS/NZS CISPR22, KN22 and KN24	
Safety	EN60950-1, EN60525-1, EN60825-2, UL60950-1, CSA C22.2 No. 60950-1	

Applicable EU Directives for the ION AVC HD, ION AVC SD, ION MPEG-2, ION MPEG-4 AVC, and ION Multichannel encoders:

Regulatory Compliance	Directive(s)	Notes
CE	Low Voltage Directive is: 2006/95/EC, EMC directive is: 2004/108/EC	
EMC	EN55022, EN61000-3-2, EN61000-3-3 and EN55024. VCCI V-3, AS/NZS CISPR22	
Safety	EN60950-1, EN60525-1, EN60825-2, UL60950-1, CSA C22.2 No. 60950-1	

© 2013 Harmonic Inc. All rights reserved.

Applicable EU Directives for ProStream 1000, 2000, 4000, 4500, 5000, and 8000:

Regulatory Compliance	Directive(s)	Notes
CE	Low Voltage Directive is: 2006/95/EC, EMC directive is: 2004/108/EC	
EMC	EN55022, EN61000-3-2, EN61000-3-3 and EN55024. VCCI V-3, AS/NZS CISPR22	
Safety	EN60950-1, EN60525-1, EN60825-2, UL60950-1, CSA C22.2 No. 60950-1	

Applicable EU Directives for the MV400, MV450, and MV500 MPEG-2:

Regulatory Compliance	Directive(s)	Notes
EMC	EN55022, EN61000-3-2, EN61000-3-3 and EN55024. VCCI V-3, AS/NZS CISPR22	
Safety	EN60950-1, EN60525-1, EN60825-2, UL60950-1, CSA C22.2 No. 60950-1	

Important Safeguards and Notices

This section provides important safety guidelines for both the Operator and Service Personnel. Specific warnings and cautions are found throughout the guide where they apply, but may not appear here. Please read and follow the important safety information, noting especially those instructions related to risk of fire, electric shock or injury to persons.

Safety and Regulatory Information for the ContentServer 3000 and ContentStore 3160

Danger: Class 1 laser product.

Attention: Produit laser de classe 1

Warnung: Laserprodukt der Klasse 1

This equipment contains optical transceivers, which comply with the limits of Class 1 laser radiation. Visible and invisible laser radiation may be emitted from the aperture of the optical transceiver ports when no cable is connected. Avoid exposure to laser radiation and do not stare into open apertures.

© 2013 Harmonic Inc. All rights reserved.

Lithium Battery Notice for Service Personnel

This product contains a lithium battery. Although the battery is not field-serviceable, observe the following warning:

Mark	Notes
	CAUTION: Danger of explosion if battery is replaced with incorrect type. Replace only with the same type recommended by the manufacturer. Dispose of used batteries according to the manufacturer's instructions. **WARNING**: CALIFORNIA PERCHLORATE ADVISORY Some lithium batteries, may contain perchlorate material. The following advisory is provided: “Perchlorate Material – special handling may apply, see www.dtsc.ca.gov/hazardouswaste/perchlorate/” for information. **ATTENTION**: Il y a danger d'explosion s'il a remplacement incorrect de la batterie. Remplacer uniquement avec une batterie du meme type ou d'un type equivalent recommande par le constructeur. Mettre au rebut les batteries usagees conformement aux instructions du fabricant **WARNUNG**: Bei Einsetzen einer falschen Batterie besteht Explosionsgefahr. Ersetzen Sie die Batterie nur durch den gleichen oder vom Hersteller empfohlenen Batterietyp. Entsorgen Sie die benutzten Batterien nach den Anweisungen des Herstellers.
	WARNING: This product relies on the building's installation for short-circuit (overcurrent) protection. Ensure that a fuse or circuit breaker no larger than 120 VAC, 15A U.S. (240 VAC, 10A international) is used on the phase conductors (all current-carrying conductors). **ATTENTION**: Pour ce qui est de la protection contre les courts-circuits (surtension), ce produit dépend de l'installation électrique du local. Vérifier qu'un fusible ou qu'un disjoncteur de 120 V alt., 15 A U.S. maximum (240 V alt., 10 A international) est utilisé sur les conducteurs de phase (conducteurs de charge).
	WARNUNG: Dieses Produkt ist darauf angewiesen, daß im Gebäude ein Kurzschluß- bzw. Überstromschutz installiert ist. Stellen Sie sicher, daß eine Sicherung oder ein Unterbrecher von nicht mehr als 240 V Wechselstrom, 10 A (bzw. in den USA 120 V Wechselstrom, 15 A) an den Phasenleitern (allen stromführenden Leitern) verwendet wird.

© 2013 Harmonic Inc. All rights reserved.

Mark	Notes
	WARNING: To prevent bodily injury when mounting or servicing this unit in a rack, you must take special precautions to ensure that the system remains stable. These guidelines are provided to ensure your safety: ■ This unit should be mounted at the bottom of the rack if it is the only unit in the rack. ■ When mounting this unit in a partially filled rack, load the rack from the bottom to the top with he heaviest component at the bottom of the rack. ■ If the rack is provided with stabilizing devices, install the stabilizers before mounting or servicing the unit in the rack.
	ATTENTION: Pour éviter toute blessure corporelle pendant les opérations de montage ou de réparation de cette unité en casier, il convient de prendre des précautions spéciales afin de maintenir la stabilité du système. Les directives ci-dessous sont destinées à assurer la protection du personnel. ■ Si cette unité constitue la seule unité montée en casier, elle doit être placée dans le bas. ■ Si cette unité est montée dans un casier partiellement rempli, charger le casier de bas en haut en plaçant l'élément le plus lourd dans le bas. ■ Si le casier est équipé de dispositifs stabilisateurs, installer les stabilisateurs avant de monter ou de réparer l'unité en casier.
	WARNUNG: Zur Vermeidung von Körperverletzung beim Anbringen oder Warten dieser Einheit in einem Gestell müssen Sie besondere Vorkehrungen treffen, um sicherzustellen, daß das System stabil bleibt. Die folgenden Richtlinien sollen zur Gewährleistung Ihrer Sicherheit dienen: ■ Wenn diese Einheit die einzige im Gestell ist, sollte sie unten im Gestell angebracht werden. ■ Bei Anbringung dieser Einheit in einem zum Teil gefüllten Gestell ist das Gestell von unten nach oben zu laden, wobei das schwerste Bauteil unten im Gestell anzubringen ist. ■ Wird das Gestell mit Stabilisierungszubehör geliefert, sind zuerst die Stabilisatoren zu installieren, bevor Sie die Einheit im Gestell anbringen oder sie warten.

The Technical File is available to proper authorities and the product is marked.

© 2013 Harmonic Inc. All rights reserved.

Safety Symbols

The product is marked with these symbols when it is necessary to refer to the manuals to prevent damage to the product.

Symbol	Name	Description
	Caution	Please observe the following important cautions: ■ When installing this equipment, always comply with the National Electrical Standard and local electrical standard for attachment of the power cords. ■ Risk of explosion if battery is replaced incorrectly or with an incorrect type. There are no user-serviceable batteries inside Harmonic products. Refer to Harmonic qualified personnel only to service the replaceable batteries. Dispose of batteries according to the instructions. ■ Use only specified replacement parts. ■ Follow static precautions at all times when handling this equipment. ■ Slots and openings in the chassis are provided for ventilation. Do not block them. Leave the back of the frame clear for air exhaust cooling and to allow room for cabling — a minimum of 6 inches (15.25 cm) of clearance is recommended. ■ Disconnect *all* AC power supplies when servicing any unit.
	Warning	Please observe the following important warnings: ■ Any instructions in this guide that require opening the chassis or removing a board should be performed by qualified service personnel only. To reduce the risk of electric shock, do not perform any servicing unless you are qualified to do so. ■ Heed all warnings on the unit and in the operating instructions. ■ Do not use this product in or near water. Disconnect all AC power before installing any options or servicing the unit unless instructed to do so by this manual. ■ This product is grounded through the power cord grounding conductor. To avoid electric shock, plug the power cord into a properly wired receptacle before connecting the product inputs or outputs.

© 2013 Harmonic Inc. All rights reserved.

Symbol	Name	Description
		■ Route power cords and other cables so that they are not likely to be damaged. Disconnect power before cleaning. Do not use liquid or aerosol cleaners; use only a damp cloth. ■ Dangerous voltages exist at several points in this product. To avoid personal injury, do not touch exposed connections and components while power is on. Do not insert anything into either of the system's two power supply cavities with power connected. ■ Do not wear hand jewelry or watches when troubleshooting high current circuits, such as the power supplies. ■ To avoid fire hazard, use only the specified correct type, voltage and current rating as referenced in the appropriate parts list for this product. Always refer fuse replacement to qualified service personnel. ■ Mechanical Loading - Mounting of the equipment in the rack should be such that a hazardous condition is not achieved due to uneven mechanical loading."
	Laser Warning	Please observe the following laser warnings: ■ Invisible Laser Radiation, when open or when operating with the fiber disconnected. AVOID DIRECT EXPOSURE TO THE BEAM. Never operate a unit with a broken fiber or with a separated fiber connector.

Safety Precautions

To avoid injury and prevent equipment damage, observe the following safety precautions:

- Do not move or ship equipment unless it is correctly packed in its original wrapping and shipping containers.
- Only Harmonic trained personnel can undertake equipment service and maintenance.
- To prevent damage by lightning, ground the unit according to local regulations.
- Do not permit unqualified personnel to operate the unit.

AC Power Supply to the Unit

To ensure correctly and safely operation of the unit, the following are required:

- Adding to the system a UPS (Uninterrupted Power Supply) and an AVR (Automated Voltage Regulator) is highly recommended.

© 2013 Harmonic Inc. All rights reserved.

- Installing the main power supply by a qualified electrician, according to power authority regulations. Make sure all powering are wired with an earth leakage, according to local regulations.
- It is recommended to install the encoder within 1.5m (approximately 5 feet) from an easily accessible grounded AC outlet.
- When the encoder is rack-mounted, ensure that the rack is correctly grounded.

DANGER: To ensure that the rack is correctly grounded by a qualified electrician. Incorrectly grounded equipment may result in electrical shock.

DC Power Supply to the Unit

In the case the unit is fitted with DC power inputs, the following are required:

- Never work on DC powered equipment while power is applied. Disconnect power before making connections to the device.
- Ensure a suitable overcurrent device is inline between the equipment and the power source.

Rack Mount Instructions

- Elevated Operating Ambient: If installed in a closed or multi-unit rack assembly, the operating ambient temperature of the rack environment may be greater than room ambient temperature. Consideration should be given to installing the equipment in an environment compatible with the maximum ambient temperature (Tma) specified by the manufacturer.
- Reduced Air Flow: Installation of the equipment in a rack should be such that the amount of air flow required for safe operation of the equipment is not compromised.
- Mechanical Loading: Mounting of the equipment in the rack should be such that a hazardous condition is not achieved due to uneven mechanical loading.
- Circuit Overloading: Consideration should be given to the connection of the equipment to the supply circuit and the effect that overloading of the circuits might have on overcurrent protection and supply wiring. Appropriate consideration of equipment nameplate ratings should be used when addressing this concern.
- Reliable Earthing: Reliable earthing of rack-mounted equipment should be maintained. Particular attention should be given to supply connections other than direct connections to the branch circuit (e.g. use of power strips).

Handling Fibre Channel Cables

- Always read and comply with the handling instructions on the shipping container.
- Follow all ESD precautions and approved fiber cleaning procedures.
- The fiber is made of a very pure, expensive glass and should be treated with great care. Handle fibers only in areas that are very clean and do not contain sharp objects.
- Wear finger cots or gloves as dirt and oils can damage the fiber and contaminate connectors.
- Do not allow kinks or knots to develop in the fiber. If tangles occur, carefully work out the tangles avoiding pulling or bending the fibre beyond its bend radius.
- Always use the correct tools for stripping and cleaving the fiber. It will save time and reduce breakage caused by scratches.

© 2013 Harmonic Inc. All rights reserved.

- If you must secure a bundle of fiber cables together, avoid plastic and metal tie wraps; secure with velcro instead.

Product End-of-Life Disassembly Instructions

This section provides instruction for the disassembly of the indicated Harmonic Spectrum MediaDeck 7000 product family in order to remove components requiring selective treatment, as defined by the EU WEEE Directive (2002/96/EC).

Description	Notes	Qty in the product	Location
Printed Circuit Board Assemblies (PCBA) (PCBA))	With a surface greater than 10 sq. cm (Additional PCBA-s may be present depending on the configuration)	2	Inside the chassis
Batteries	All types including standard alkaline and lithium coin or button style batteries	1	LITHIUM COIN, P/N 57-1006 3V,20MM,2PIN on the main Base board. California USE Only: Perchlorate Material - For handling see: *www.dtsc.ca.gov/hazardouswaste/perchlorate*
Mercury-containing components	For example, mercury in display backlights, switches, batteries	None	
Liquid Crystal Displays (LCD) with a surface greater than 100 sq cm	Includes background illuminated displays	None	
Video display device	With a screen size of more than 10 cm measured diagonally	None	
Cathode Ray Tubes (CRT) None		None	
Capacitors / condensers (Containing PCB/PCT)		None	
Electrolytic Capacitors / Condensers measuring greater than 2.5 cm in diameter or height		None	
External electrical cables and cords		2	
Gas Discharge Lamps		None	

© 2013 Harmonic Inc. All rights reserved.

Description	Notes	Qty in the product	Location
Plastics containing Brominated Flame Retardants		None	
Components and parts containing toner and ink, including liquids, semi-liquids (gel/paste) and toner		None	
Components and waste containing asbestos		None	
Fiber-optic cables		None	
Laser parts		None	
Radioactive components, parts or materials		None	

The following table lists the required tools.

Description	Size
Philips screw drivers	#1 and #2
Flat-head screw driver	small
Flat-head screw driver	large
Diagonal-cutting pliers, long-nose pliers	~5"
Sockets	11/32", 1/2", 5/8", and 9/16" (deep)
Special tools to remove specific components	Not needed

Product Disassembly Process

1. Disassemble equipment at a dedicated area only, gather the needed tools for disassembly.
2. Remove covers, housing, etc.
3. Remove and separate subassemblies (i.e. lasers, cables, metals, displays, fans, etc.).
4. Separate hazardous materials from the remainder of the material.
   a. Sort hazardous materials into their different types (i.e., batteries, hazardous liquids, hazardous solids, fiberglass, etc.).
   b. Proceed with hazardous waste management processes only.
5. Identify re-usable materials/subassemblies and separate these from the rest of the material.
6. Identify and separate recyclable materials as per below examples:
   a. Scrap material to be sent to smelter(s).
   b. E-waste such as displays, CPU's, cables and wires, hard drives, keyboards, etc.
   c. Metals such as steel, brass, and aluminum.
   d. Plastics such as fan casings, housings, covers, etc.

© 2013 Harmonic Inc. All rights reserved.

e. Fiber optics and plastic tubing not containing electrical or data wiring.

Safety Rules

Recycler personnel are to wear personal protective equipment including proper eye protection, proper hand protection, and proper breathing protection if needed.

Recycler personnel shall be experienced with using the proper tools required for disassembling equipment. Untrained personnel shall not disassemble Harmonic products. Unfamiliarity with tools can cause damage and injury.

© 2013 Harmonic Inc. All rights reserved.

HEADQUARTERS
Americas Sales
4300 North First Street
San Jose, CA 95134 U.S.A.
T 1 800 828 5521 inside the U.S.
+1 408 542 2559 outside the U.S.
F +1 408 490 6001

ASIA-PACIFIC
Harmonic (Asia Pacific) Limited
Suite 2301, L23, Office Tower
Langham Place, 8 Argyle St
Mongkok, Kowloon Hong Kong
T +852 3713 9300
F +852 2116 0083

EUROPE AND MIDDLE EAST
United Kingdom
250 Fowler Avenue, Ground Floor
IQ Farnborough
Farnborough Hampshire GU14 7JP
United Kingdom
T +44 (0)1 252 555 400
F +44 (0)1 252 377 171

Africa, India, Russia and CIS Countries
10 Haamel St
Park Afek
Rosh Ha'ayin, 48092 Israel
T +972.3.9007777
+972.3.9007800
F +972.3.9007766

© 2013 Harmonic Inc. All rights reserved.